City of Concord, NH

Subdivision Regulations

Adopted December 15, 2010
Revised October 5, 2011
Revised April 17, 2013

City of Concord Planning Board
Planning Division
Community Development Department

Foreword

The authorization to municipal regulation of the subdivision of land is permitted in NH under Revised Statues Annotated Chapters 674, 675, and 676, as amended by subsequent Session Laws.

By ordinance passed November 4, 1949, with subsequent amendments, the Board of Alderman of the City of Concord authorized and empowered the City Planning Board to approve or disapprove subdivisions.

The City Council of the City of Concord has granted the Planning Board the authority to regulate subdivisions, pursuant to Article 29-1 of the City of Concord Code of Ordinances.

The Planning Board, pursuant to the authority granted, adopted and placed into effect regulations governing land subdivision in Concord on February 7, 1950. The Board exercised, without interruption, those regulatory controls in the interest of orderly community development since that date.

These regulations were revised by the Planning Board in 1964, 1970, with subsequent minor amendments, and in 1985 with subsequent minor amendments. The regulations adopted on December 15, 2010, replace and supersede previous versions of the subdivision regulations.

TABLE OF CONTENTS

SUBDIVISION REGULATIONS PAGE

Chapter 1 General

Section 1 Authority **2**

Section 2 Policy **2**

Section 3 Purposes **3**

Section 4 Jurisdiction **5**

Section 5 Adoption **5**

Chapter 2 Application Procedures

Section 6 Overall Procedures and Classification

6.01 General Procedures **7**
6.02 Classification of Subdivisions **9**
6.03 Application Stages **10**
6.04 Revocation of Planning Board Approval **11**
6.05 Tabled or Postponed Applications **11**

Section 7 Preliminary Conceptual Consultation Phase

7.01 Voluntary Process **12**
7.02 Extent of Consideration **12**
7.03 Process **12**
7.04 Submission Requirements **12**
7.05 Fees **12**
7.06 Schedule **13**
7.07 Consideration **13**

Section 8 Design Review Phase

8.01 Extent of Consideration **13**
8.02 Process **13**
8.03 Fees **13**

TABLE OF CONTENTS

Subdivision Regulations		Page
Section 8	**Design Review Phase** (continued)	
	8.04 Schedule	**13**
	8.05 Design Review Phase Application Requirements	**13**
	8.06 Determination of Completeness	**14**
	8.07 Design Review Phase Consideration	**15**
Section 9	**Minor Subdivision Procedure**	
	9.01 Planning Division Inquiry	**15**
	9.02 Minor Subdivision Application Requirements	**16**
	9.03 Notice to Applicant, Abutters and Public	**16**
	9.04 Fees	**17**
	9.05 Classification	**17**
	9.06 Determination of Completeness	**17**
	9.07 Public Hearing	**17**
	9.08 Consideration of, and Action on, Application	**18**
Section 10	**Major Subdivision Procedure**	
	10.01 Planning Division Inquiry	**20**
	10.02 Major Subdivision Application Requirements	**20**
	10.03 Notice to Applicant, Abutters and Public	**21**
	10.04 Fees	**21**
	10.05 Classification	**21**
	10.06 Determination of Completeness	**21**
	10.07 Determination of Regional Impact	**22**
	10.08 Public Hearing	**22**
	10.09 Consideration of, and Action on, the Application	**23**
	10.10 Phasing of Major Subdivision Plats	**25**
Section 11	**Voluntary Merger Procedures and Requirements**	
	11.01 Procedure for Voluntary Merger	**26**
	11.02 Delegation	**26**
	11.03 Application Requirements	**26**
	11.04 Survey Drawings	**26**
	11.05 Approval	**26**
	11.06 Recording of Documents	**27**

TABLE OF CONTENTS

SUBDIVISION REGULATIONS PAGE

Chapter 3 Application Requirements

Section 12 General Requirements for All Drawings
12.01 Research 29
12.02 All Plans 29
12.03 Plats and Construction Plans 29
12.04 Location Plan 30
12.05 Vicinity Plan 30
12.06 Plan References 30
12.07 Wetland Delineations 31
12.08 Existing Condition 31
12.09 Electronic Submission 34

Section 13 General Requirements for Documentation
13.01 All Applications 34
13.02 Documentation Required Prior to Recording Plans 36

Section 14 Application Requirements for Preliminary Conceptual Consultation Phase and Design Review Phase
14.01 Preliminary Conceptual Consultation Phase Requirements 38
14.02 Design Review Phase Requirements 38

Section 15 Application Requirements for Minor Subdivisions
15.01 Required Information 42
15.02 Final Plat Requirements 43
15.03 Information to be Provided on Final Plat 44
15.04 Other Requirements 46

Section 16 Application Requirements for Major Subdivision
16.01 Required Information 46
16.02 Final Plat Requirements 47
16.03 Information to be Provided on Final Plat 49
16.04 Construction Plans 51

TABLE OF CONTENTS

SUBDIVISION REGULATIONS PAGE

Section 17 **Special Provisions for Condominium Subdivisions** (continued)
17.01 Special Provisions for Condominium Subdivisions **55**
17.02 Site Plan **55**
17.03 Building Floor Plans **55**
17.04 Common Facilities **56**
17.05 Acceptable Water Metering and Water Service **56**
17.06 Condominium Declaration and By-Laws **57**

Section 18 **Special Provisions for Comprehensive Development Plans**
18.01 Establishment **57**
18.02 Application Procedure **57**
18.03 Submittal Requirements **57**
18.04 Phasing **60**
18.05 Standards for Review **60**
18.06 Issuance of a Decision **61**
18.07 Resubdivision **61**
18.08 Amendments **62**

Chapter 4 Design Standards

Section 19 **General Design Standards**
19.01 Conformance to Applicable Laws, Rules and Regulations **64**
19.02 Self-Imposed Restrictions **64**
19.03 Specification References **64**
19.04 Monuments **65**
19.05 General Design Standards for Lots **66**

Section 20 **Street Layout and Access Standards**
20.01 General Requirements **69**
20.02 Construction and Design Standards **69**
20.03 Substandard Existing Streets **69**
20.04 Future Streets **69**
20.05 Traffic Impacts **70**
20.06 Appropriate Design **70**
20.07 Master Plan **70**
20.08 Access **70**

TABLE OF CONTENTS

SUBDIVISION REGULATIONS **PAGE**

Section 20 **Street Layout and Access Standards** (continued)
20.09 Residential Single Family Driveways **70**
20.10 Common Private Drives **71**
20.11 Residential Common Private Drives **71**
20.12 Length of Residential Common Private Drives **72**
20.13 Curbing for Residential Common Private Drives **72**
20.14 Terminus of Residential Common Private Drives **72**
20.15 Limited Access Residential Subdivision **73**
20.16 Limited Access Non-residential Subdivisions **73**
20.17 Commercial Driveways and Access **73**
20.18 Interconnected Drives along Arterial Roadways **74**
20.19 Street Layout and Arrangement **74**
20.20 Connectivity **74**
20.21 Procedures for Subdivision Where Further Subdivision is Possible **74**
20.22 Dead End Streets **74**
20.23 Temporary Dead End Streets **76**
20.24 Length of Dead End Streets **76**
20.25 Layout of Local or Minor Streets **76**
20.26 Intersections **76**
20.27 Reserve Strips **77**
20.28 Boundary Streets **77**
20.29 Grades **77**
20.30 Blocks **77**
20.31 Street Names and Addresses **78**
20.32 Parking **78**

Section 21 **Design Standards for Streets**
21.01 Local Residential Street Sections **83**
21.02 Collector, Arterial and Non-residential/Mixed Use Local Street Sections **83**
21.03 Other Public Ways **85**
21.04 Construction Standards and Details **86**
21.05 Pavement Width **86**
21.06 Sidewalks **86**
21.07 Curbs **86**

TABLE OF CONTENTS

SUBDIVISION REGULATIONS PAGE

Section 21 **Design Standards for Streets and Private Drives** (continued)
21.08 Regulatory and Advisory Signs **86**
21.09 Intersections **86**
21.10 Gravel Shoulders **87**
21.11 Cul-de-sacs **87**
21.12 Hammerhead or T-shaped Turnaround **87**
21.13 Temporary Turnaround **88**
21.14 Bridges **88**
21.15 Landscaping and Street Trees **88**
21.16 Street Lights **88**
21.17 Street Signs **88**
21.18 Medians **88**
21.19 Roundabouts **89**

Section 22 **Sidewalks, Multi-use Paths and Trails**
22.01 General Requirements **99**
22.02 Sidewalks Required **99**
22.03 Arrangement **99**
22.04 Location **99**
22.05 Connection to Private Property **99**
22.06 Accessibility **99**
22.07 Design Standards **99**
22.08 Construction Standards **100**
22.09 Curb Ramps **100**
22.10 Multi-use Paths **100**
22.11 Trails **100**

Section 23 **Storm Water Management**
23.01 General Requirements **101**
23.02 Construction Standards **101**
23.03 Municipal Storm Drainage System **101**
23.04 Rural Low Density Residential Subdivisions **102**
23.05 Private Systems **102**
23.06 State and Federal Permits **102**
23.07 Storm Water Management Plan **102**
23.08 Storm Water Design Standards for Subdivisions with Significant Impacts **103**

TABLE OF CONTENTS

SUBDIVISION REGULATIONS PAGE

Section 23 **Storm Water Management** (continued)
23.09 Storm Water Design Standards for Minor Impact Subdivisions **104**
23.10 Flood Hazard Areas **105**
23.11 Existing Watercourses **105**
23.12 Drainage Easements **105**
23.13 Accommodation of Upstream Drainage Areas **106**
23.14 Private Drainage Facilities in Condominium Subdivisions **106**
23.15 Lot Drainage and Grading **106**
23.16 Areas of Poor Drainage **106**
23.17 Erosion Control **106**
23.18 Hydraulic Grade Line **106**
23.19 Aquifer Protection **106**

Section 24 **Water Supply**
24.01 General Requirements **107**
24.02 Municipal Water System **107**
24.03 Design Standards for Municipal Water Supply **107**
24.04 Non-municipal Water Supply **110**
24.05 Design Standards for Non-municipal Water Supply **110**
24.06 State and Federal Permits **110**
24.07 Requirements and Design Standards for Municipal Water Supply in Portions of Penacook **110**

Section 25 **Sanitary Sewage Disposal**
25.01 General Requirements **110**
25.02 Municipal Sanitary Sewers **111**
25.03 Design Standards for Municipal Sanitary Sewer **111**
25.04 Non-municipal Sanitary Sewer Disposal **112**
25.05 State and Federal Permits **112**

Section 26 **Non-Municipal Utilities**
26.01 General Requirements **112**
26.02 Design Standards **112**

TABLE OF CONTENTS

SUBDIVISION REGULATIONS PAGE

Section 27 Conservation Land, Parks, Open Space, and Sites for Other Public Uses
27.01 General Requirements **113**
27.02 Easements and Covenants **113**
27.03 Design Standards **113**

Section 28 Landscaping and Erosion Control
28.01 Landscape Plans **114**
28.02 Preservation **115**
28.03 Land Clearing Restricted **115**
28.04 Required Landscaping Improvements **115**
28.05 Erosion Control **118**
28.06 Site Stabilization Guarantee **119**
28.07 Wetland Buffer Marking **119**

Section 29 Fire Protection
29.01 Residential Sprinklers Required **119**
29.02 Plat Requirements **120**
29.03 Exemptions to the Requirements for Residential Sprinkler Systems **120**
29.04 Gated Access **120**
29.05 Gated Emergency Access **120**

Chapter 5 Administration and Enforcement

Section 30 Financial Guarantees
30.01 Financial Guarantees **122**
30.02 Acceptable Financial Guarantees..... **122**
30.03 Amount of Financial Guarantees **122**
30.04 Legal Provisions **122**
30.05 Release of Financial Guarantees **122**
30.06 Reduction of Financial Guarantees **123**
30.07 Maintenance Guarantee **123**
30.08 Site Stabilization Guarantee **123**
30.09 Construction Prior to Recording **123**

TABLE OF CONTENTS

SUBDIVISION REGULATIONS PAGE

Section 31 Completion and Maintenance of Improvements
31.01 Completion of Required Improvements **124**
31.02 Temporary Improvements **124**
31.03 Cost of Improvements **124**
31.04 Failure to Complete Improvements **124**
31.05 Inspection of Improvements **124**
31.06 Acceptance of Public Streets **125**
31.07 Conditional Acceptance of Public Streets **125**
31.08 Interim Maintenance of Conditionally Accepted Streets **125**
31.09 Fulfillment of Conditions Acceptance of Public Streets **125**
31.10 As Built Plans **126**
31.11 Maintenance of Improvements During Construction ... **126**
31.12 Issuance of Building Permits **126**
31.13 Issuance of Certificates of Occupancy **126**
31.14 Consumer Protection Legislation and Conflict Of Interest Statutes **126**

Section 32 Special Investigative Studies – Third Party Review
32.01 General Requirements **127**
32.02 Types of Studies **127**
32.03 Review Fees **127**
32.04 Additional Fees **127**

Section 33 Traffic Impacts and Traffic Studies
33.01 Thresholds **128**
33.02 Trip Generation Report **128**
33.03 Review Fees and Process **128**
33.04 Future Streets **128**
33.05 Traffic Impacts **128**
33.06 Impact Fees **129**
33.07 Project Scoping Session **129**
33.08 Elements of a Traffic Study **130**

Section 34 Conditional Use Permits
34.01 General **131**
34.02 Minimum Information **131**
34.03 Concurrent with Subdivision **131**

TABLE OF CONTENTS

SUBDIVISION REGULATIONS PAGE

Section 34 **Conditional Use Permits** (continued)
34.04 Application Requirements **132**
34.05 Stipulations of Approval **132**
34.06 Inspections of Improvements **132**
34.07 Appeals to Superior Court **132**

Section 35 **Administration and Enforcement**
35.01 Amendments **132**
35.02 Conditions **133**
35.03 Interpretation **133**
35.04 Conflict with Public Provisions **133**
35.05 Conflict with Private Provisions **133**
35.06 Separability **133**
35.07 Savings Provision **134**
35.08 Waivers **134**
35.09 Waiver Conditions **135**
35.10 Waiver Petition **135**
35.11 Official Map **135**
35.12 Acceptance of Public Improvements **135**
35.13 Fees **135**
35.14 Public Hearing **135**
35.15 Planning Board Rules **136**
35.16 Action by the Planning Board **136**
35.17 Compliance with Regulations **137**
35.18 Appeals **138**
35.19 Minor and Major Amendments **138**
35.20 Enforcement **138**
35.21 Violations and Penalties **138**
35.22 Exemption From Subsequent Amendments to the Subdivision Regulations and Zoning Ordinances .. **139**
35.23 Scattered and Premature Development **139**
35.24 Permission to Visit and Inspect Property **140**

TABLE OF CONTENTS

SUBDIVISION REGULATIONS PAGE

Glossary

Definitions 141

Tables

20-1 Standards for Residential Common Private Drives 75
21-1 Local Residential Street Standards 90
21-2 Non-residential Street Standards 91

Figures

20-1 Private Common Drive Two Dwelling Units 79
20-2 Private Common Drive Three to Eight Dwelling Units..... 80
20-3 Private Common Drive Greater Than Eight Dwelling Units 81
20-4 "Y" and "T" Hammerheads 82
21-1 Residential Low Density Rural Street 92
21-2 Residential Rural Cluster Street 93
21-3 Residential Urban Street 94
21-4 Non-residential Mixed Use Local Street..... 95
21-5 Rural Collector Street 96
21-6 Non-residential Arterial & Collector Street 97
21-7 Roundabout 98

Appendices

Appendix A Fees 155

Appendix B Standard Notes for Plans 158

Appendix C Easements and Legal Documents 159

Appendix D Certification 160

City of Concord, NH
Subdivision Regulations

Chapter 1
Authority and Purpose

SECTION 1 Authority

SECTION 2 Policy

SECTION 3 Purposes

SECTION 4 Jurisdiction

SECTION 5 Adoption

City of Concord Planning Board
Planning Division
Community Development Department
41 Green Street
Concord, NH 03301
603-225-8515
planning@concordnh.gov

Subdivision Regulations

SECTION 1 Authority

1.01 In accordance with the provisions of Chapters 672, 673, 674, 675, 676, and 677, of the NH Revised Statutes Annotated, and pursuant to the authority vested in the Concord Planning Board by the City of Concord, NH, under the provisions of the Code of Ordinances, Concord, NH, Title IV, Article 29-1-1, Power to Regulate Subdivisions, the Planning Board adopts the following regulations governing the subdivision of land in the City of Concord, NH.

1.02 By the same authority, the Planning Board shall have the authority to approve or disapprove plats for the subdivision of land (NH RSA 674:35). Every plat approved by the Planning Board shall be deemed an amendment of, an addition to, or a detail of the Official Map (NH RSA 674:38).

1.03 By the same authority, and in accordance with provisions of the Code of Ordinances, Concord, NH, Title IV, Article 29-1-4, Applicability of Ordinance to Condominiums, and NH RSA 356-B, Condominium Act, the Planning Board shall have the authority to approve or disapprove plats for condominium units and convertible land or units, as well as common and limited common areas.

SECTION 2 Policy (NH RSA 674:1, 674:36)

2.01 It is hereby declared to be the policy of the Planning Board of the City of Concord to consider the subdivision of land and the subsequent development of the subdivided plat as subject to the control of the municipality for the orderly, planned, efficient, economical and environmentally sensitive development of the municipality.

2.02 Land to be subdivided shall be of such character that it can be used safely for building purposes without danger to health or peril from fire, flood, or other menace, and land shall not be subdivided until adequate public facilities, open space, public safety services, and transportation facilities exist and proper provisions have been made for stormwater drainage, sewage disposal, potable

water supply, and capital improvements such as schools, parks, recreation facilities, transportation improvements, and public safety facilities.

2.03 The existing and proposed public improvements shall conform to and be properly related to the proposals shown in the Master Plan and Official Map of the municipality, and it is intended that these regulations shall supplement and facilitate the enforcement of the provisions and standards contained in building and housing codes, health codes, and zoning ordinances (NH RSA 674:3, 4, 9-11).

SECTION 3 PURPOSES (NH RSA 674: 36)

These regulations are adopted for the following purposes:

3.01 To protect and provide for the public health, safety, and prosperity of the municipality.

3.02 To provide for future harmonious development and redevelopment of the municipality in accordance with the Master Plan.

3.03 To provide against such scattered or premature subdivision of land as would involve danger or injury to health, safety, or prosperity by reason of the lack of water supply, drainage, transportation, schools, fire protection, emergency medical services, or other public services, or necessitates the excessive expenditure of public funds for the supply of such services.

3.04 To provide for adequate light, air, and privacy to secure safety from fire, flood, and other danger and to prevent overcrowding of the land and undue congestion of population.

3.05 To protect and conserve the value of land throughout the municipality and the value of buildings and improvements upon the land, and to minimize the conflicts among the uses of land and buildings.

3.06 To guide policy and action in order to provide adequate and efficient transportation, water, sewerage, schools, parks, playgrounds, recreation, open space, public and private public utilities, services and facilities.

3.07 To provide the most beneficial relationship between the uses of land and buildings and the circulation of traffic throughout the community, having particular regard to the avoidance of congestion in the streets and highways, to provide for connectivity between neighborhoods, to calm traffic within

neighborhoods, to manage access from abutting land uses, to provide for pedestrian and bicycle circulation throughout the community, and to provide for appropriately designed bus stops along transit corridors.

3.08 To provide for the proper location and width of streets and building lines and for their proper arrangement and coordination within a subdivision or plan including along the frontage of the subdivision. To provide for adequate vehicular, bicycle and pedestrian access to the subdivision by the public and for adequate, redundant and timely access by public safety vehicles.

3.09 To establish reasonable standards of design and procedures for approval of subdivisions and resubdivisions, in order to further the orderly layout and uses of land and to insure proper legal descriptions and monumentation of subdivided land.

3.10 To insure that public facilities are available and will have a sufficient capacity to serve the proposed subdivision.

3.11 To require that the natural site conditions be considered during the subdivision design process and, where appropriate, to preserve, protect, and promote such physical and natural features as rivers, streams, ponds, marshes, wetlands, scenic vistas, steep slopes, woodlands, wildlife habitat, special geological features, and other sensitive environmental resources. To minimize the destruction of natural vegetation and alteration of terrain and to insure appropriate development in relation to these natural features.

3.12 To prevent the pollution of air, streams, ponds, and groundwater, to assure the adequacy of drainage facilities, to safeguard the water table, and to encourage the wise use and management of natural resources throughout the municipality in order to preserve the integrity, stability, and beauty of the community and the value of land.

3.13 To provide for open spaces of adequate proportions and area.

3.14 To encourage the most efficient design and layout of subdivisions, while preserving the density of land use as recommended in the Master Plan and established in the City of Concord's Zoning Ordinance.

3.15 To identify and minimize impacts on historic sites, buildings and structures.

SECTION 4 Jurisdiction (NH RSA 674:35)

4.01 These subdivision regulations shall apply to all subdivisions of land, as defined herein, and located within the corporate limits of the City of Concord.

4.02 No land shall be subdivided or portions of a lot transferred within the corporate limits of the City of Concord, until a subdivision plat for said land has been prepared in accordance with these regulations, approved by the Board, endorsed by the Chair and Clerk of the Planning Board, and filed at the Merrimack County Registry of Deeds.

4.03 No building permit or certificate of occupancy shall be issued for any parcel or plat of land which was created by subdivision after the effective date of, and which is not in conformity with, the provisions of these subdivision regulations.

4.04 These subdivision regulations shall apply to resubdivisions, minor lot line adjustments, and condominiums.

SECTION 5 Adoption (NH RSA 675:6)

In order that land may be subdivided in accordance with these purposes and policies, these subdivision regulations are hereby adopted on December 15, 2010. These regulations shall be in force on January 1, 2011, upon certification by the Planning Board, and the filing of a certified copy of the regulations with the City Clerk.

Subdivision Regulations

Chapter 2
Application Procedures

SECTION 6 Overall Procedures and Classification

SECTION 7 Preliminary Conceptual Consultation Phase

SECTION 8 Design Review Phase

SECTION 9 Minor Subdivision procedure

SECTION 10 Major Subdivision procedure

SECTION 11 Voluntary Merger Procedures and Requirements

SECTION 6 OVERALL PROCEDURES AND CLASSIFICATION

6.01 General Procedures

(1) *Application Required:* Whenever any subdivision of land is proposed, before any permit for the erection of a structure in such proposed subdivision shall be granted, the subdividing owner, or his authorized agent, shall apply for and secure approval of such proposed subdivision in accordance with the following procedures.

(2) *Application Deadlines:* A schedule of dates and times for subdivision application deadlines is established each year by the Clerk of the Board, and is designed to allow reasonable time for City staff to review and comment on applications prior to consideration by the Planning Board. The schedule is available prior to January 2nd of each year from the Planning Division.

(3) *Official Submission Date:* Upon submittal of an application, the next available published deadline date shall constitute the official submittal date of the application from which the statutory period for determination of completeness shall be calculated as set forth in NH RSA 676:4. Applications received prior to the deadline date shall be considered for completeness at the next scheduled regular meeting of the Planning Board after the deadline date. Recessed Planning Board meetings and special meetings of the Board are not considered regular meetings of the Planning Board at which an application can be determined complete.

(4) *Conformity with Zoning:* For an application to be determined complete, the proposed application must be in conformity with the Zoning Ordinance, at the time the notices are mailed to the abutters notifying them of the Board's consideration of completeness.

(5) *Conditional Use Permits:* Where CUPs are required in conjunction with a proposed subdivision, a completed CUP application for each CUP requested shall be made at the same time as the subdivision application. Where a CUP is required, no subdivision application may be considered complete without a complete CUP application. CUP applications will be considered concurrently with the subdivision application.

(6) *Resubdivision of Land:* A minor change in property boundaries involving only the conveyance of property between two or more parcels or lots, and which does not involve the construction of infrastructure or the creation of new lots, shall be deemed a resubdivision. A boundary line agreement, where the boundary between two properties has been unclear, or has been in dispute, and does not involve the conveyance of a portion of an existing lot, shall not be deemed a resubdivision. A resubdivision shall be classified as a minor subdivision and shall be considered by the Planning Board as called for in these regulations.

(7) *Procedure for Subdivision Where Further Subdivision Is Possible:* Whenever a parcel of land is subdivided, and where there is the possibility that further subdivision may occur on the property, or on the immediately adjacent properties, the Planning Board may require that rights-of-way for the future layout or extension of streets be shown on the plat and easements be recorded for the future streets.

(8) *Transfer of Plat Approval From Applicant to a New Owner:* Where ownership of the land to be subdivided is transferred prior to the signing of the approved plat, the new owner must file the following with the Planning Board:

(a) The deed to show title to the property subject to plat approval; and

(b) Evidence of a legally binding agreement of the right to the property and the right to use the approved plans of the original applicant. The new owner must show that permission is given by any and all parties responsible for the preparation and submission of the approved plans.

(9) *Special Investigations:* The Board may request the applicant to prepare special studies, at the applicant's expense, of public facilities and utilities required to serve the proposed subdivision, the impacts of the proposed subdivision on natural resources, environmental quality, or the fiscal and economic impacts of the proposed subdivision; or the Board may contract with a consultant to perform these studies at the applicant's expense. The Board's decision to request a special study shall be based on a determination that additional information is necessary for the Board to properly review an application to determine the impacts of a proposed subdivision on abutters, to determine the impacts of the proposed subdivision on community infrastructure and

the ability of the infrastructure to support the proposed development, to determine the impacts of a development on the natural environment and mitigation that may be necessary, or to determine the fiscal impacts of the development, or as may otherwise be required herein.

The procedures for the review and processing of a special investigative study are set forth in Section 32, Special Investigative Studies - Third Party Review, herein. The submittal requirements for special investigative study of traffic impacts are set forth in Section 33, Traffic Impacts and Traffic Studies, herein.

(10) *Third Party Review of Applications:* In the review of applications, the Planning Board may contract with consultants to review all or portions of any application, an environmental impact statement, or any special study requested by the Planning Board. This review shall be done at the applicant's expense.

6.02 Classification of Subdivisions:

(1) *Classification:* The Clerk of the Planning Board shall initially classify each subdivision as either a major or minor subdivision. The Planning Board shall confirm or reclassify when the subdivision application is presented to the Board.

(2) *Minor Subdivisions:* A subdivision classified as a minor subdivision is one which contains three (3) or fewer lots fronting on an existing street, not involving the creation of any new street or road, the extension of municipal facilities, or the creation of any public improvements and does not adversely affect the remainder of the parcel or adjoining property. For the purpose of these regulations all resubdivisions or minor lot line adjustments shall be classified as Minor Subdivisions.

(3) *Major Subdivisions:* All subdivisions not classified as a minor subdivision shall be major subdivisions.

(4) *Condominium Conversions:* For the purpose of these regulations, existing developments proposed for conversion to condominiums, where there will be no change in the use of the land and no change in the site layout shall be classified as minor subdivisions. Developments proposed for conversion to condominiums involving a change of use of the land or a change in the site layout shall be classified as major subdivisions.

(5) *Voluntary Mergers:* Voluntary Mergers consist of the consolidation of two or more contiguous existing lots under the same ownership into a single property. The review and approval of Voluntary Mergers was delegated to the Clerk of the Planning Board on July 17, 1997, by action of the Planning Board under the provisions of RSA 674:39-a.

6.03 Application Stages

(1) *Minor Subdivisions*: There is only a final plat stage for minor subdivisions.

(2) *Major Subdivisions:* There are three possible stages for all major subdivisions: (1) the Preliminary Conceptual Consultation Phase which is optional; (2) the Design Review Phase which is also optional; and (3) the final plat stage which is mandatory.

(a) *Preliminary Conceptual Consultation Phase:* The applicant may enter into non-binding discussions with the Planning Board at the Preliminary Conceptual Consultation Phase. The Planning Board and the applicant may only discuss proposals in conceptual form and in general terms, such as the desirability of types of development, the consistency with the Master Plan, and the availability of public facilities to serve the proposed land uses pursuant to RSA 676:4 II(a). Pre-application consultations shall occur only at regularly scheduled meetings of the Planning Board. Public notice is not required for preliminary consultations.

(b) *Design Review Phase:* The applicant may enter into non-binding discussions with the Planning Board, which involve specific design and engineering details. Public and abutter notice shall be provided in the same manner as for a final plat. Applicants are encouraged to submit proposals for consideration at the Design Review Phase. Public notice is required and abutters are noticed by certified mail, for all meetings where the Planning Board considers an application during the Design Review Phase.

(c) *Final Plat:* The final plat consolidates the former Preliminary Plat and final plat stages in traditional subdivision regulations. It is a one-step process and consists of the submittal, review and action on plat drawings, construction plans, supporting studies and reports, legal documents and permits. Public notice and

abutter notice by certified mail are required for all public hearings. Public notice and abutter notice by regular mail is required for all further considerations by the Board after the public hearing(s) are closed.

(3) *Comprehensive Development Plan:* The Comprehensive Development Plan (CDP) submitted in compliance with Article 28-4-1 (g) (2) of the Zoning Ordinance shall conform to the application procedures for a subdivision submitted for the Design Review Phase. CDPs are not optional, and representations made by the applicant and approvals by the Planning Board are binding under the terms of Article 28-9-4(e) of the Zoning Ordinance. Public notice and abutter notice by certified mail are required for all hearings for Comprehensive Development Plans.

6.04 Revocation of Planning Board Approval:

(1) *Recorded Plat*: A recorded plat may be revoked, in whole or in part, by the Planning Board pursuant to the provisions and procedures set forth in RSA 676:4-a.

(2) *Rescinding of Prior Board Approval*: Where the Planning Board finds that circumstances have materially changed or new information is brought to the attention of the Board which, in the opinion of the Board, would materially affect the validity of its prior decision, the Board may, at any regular or properly advertised public meeting, rescind approval of a subdivision which has not been recorded at the Merrimack County Registry of Deeds. A public hearing shall occur prior to the Board's consideration and action to rescind a previously granted subdivision approval, with notice being provided to the applicant, or the applicant's successor in title, as well as notification of the abutters pursuant to Section 9.03, Notice to Applicant, Abutters, and Public, herein.

6.05 Tabled or Postponed Applications: Any application which has been tabled pending submittal of additional information from the applicant or has been postponed at the request of the applicant, and for which no information has been submitted by the applicant within one (1) year from the date of tabling, or for which no further consideration is sought by the applicant within one (1) year from the date of postponement, shall be deemed to be withdrawn. A new application, together with a new fee, will be required for any further consideration by the Board of the subdivision.

SECTION 7 PRELIMINARY CONCEPTUAL CONSULTATION PHASE

7.01 ***Voluntary Process:*** An applicant may seek a Preliminary Conceptual Consultation with the Planning Board but it is anticipated that a consultation will not be necessary for most subdivisions.

7.02 ***Extent of Consideration:*** A Preliminary Consultation pursuant to RSA 676:4 II(a) may be sought for the purpose of discussing Planning Board policies, standards and conclusions derived from the Master Plan, which reflect community resources, needs, goals and policies, so that potential applicants may evaluate whether their subdivision concept is consistent with the Master Plan. The Planning Board and the applicant may only discuss proposals in conceptual form and in general terms such as the desirability of types of development, consistency with the Master Plan, and the availability of public facilities to serve the proposed land uses pursuant to RSA 676:4 II(a). The applicant and the Board may discuss the potential and the timing for utility extensions or the construction of other public facilities to serve the project as set forth in the Master Plan and the City's CIP (CIP) and Budget. Consideration of elements of the design or layout of the subdivision and conformity with Zoning Ordinance and Subdivision Regulations cannot be addressed at this stage. The Planning Board may advise the potential applicant, where appropriate, to discuss the proposed subdivision with those officials who must eventually approve those aspects of the subdivision plat coming within their jurisdiction.

7.03 ***Process:*** The prospective applicant may seek the advice of the Planning Board only at a regularly scheduled meeting. Public notice and abutter notice are not required for Preliminary Consultations.

7.04 ***Submission Requirements:*** The applicant shall submit in writing a statement of the proposed use indicating the types and densities of any residential and non-residential development, including accessory uses, along with a location plan sufficient to identify the location and extent of the project. The applicant shall include within the statement a description of those issues and policies contained within the Master Plan that the applicant wishes to discuss with the Planning Board, as well as, any issues associated with the existing and planned extension of public utilities and infrastructure.

7.05 ***Fees:*** No application fee is required.

7.06 ***Schedule:*** Submissions shall conform to the deadlines established for minor subdivisions. The developer may seek the advice of the Planning Board only at a regularly scheduled meeting of the Board.

7.07 ***Consideration:*** Pursuant to RSA 676:4 II (a) , statements, comments, suggestions and recommendation made by the Planning Board are non-binding. Representations, comments, suggestions and alternatives made by the applicant or the applicant's agents are equally non-binding. The Planning Board may advise the applicant, where appropriate, to discuss the proposed subdivision with those officials who must eventually approve these aspects of the subdivision plat coming within their jurisdiction.

SECTION 8 DESIGN REVIEW PHASE

8.01 ***Extent of Consideration:*** A Design Review Phase discussion with the Planning Board may be sought pursuant to RSA 676:4 II (b) for the purpose of discussing the subdivision design and layout before preparing the final plat for a major subdivision. The applicant may discuss with the Planning Board the procedure for application of a subdivision plat and the requirements as to general layout of streets and for reservations of land, street improvements, drainage, utilities, fire protection, and similar matters, as well as the availability of existing services.

8.02 ***Process:*** The prospective applicant may seek the advice of the Planning Board only at a regularly scheduled meeting when the agenda category of "Design Review Plans" or "other business" is called. Public notice is required, and abutters are noticed by certified mail, for all meetings where the Planning Board considers subdivisions during the Design Review Phase. A public hearing shall not be held for the Design Review but comments may be received from abutters or other parties of interest.

8.03 ***Fees:*** Fees shall be required as adopted from time to time by the Planning Board as set forth in Appendix A. Fees, herein.

8.04 ***Schedule:*** Submissions shall conform to the deadlines established for major subdivisions. The developer may seek the advice of the Planning Board only at a regularly scheduled meeting of the Board.

8.05 ***Design Review Phase Application Requirements:*** The applicant shall file with the Planning Board, in accordance with the established application deadlines, a request for consideration of a Design Review Plan for a proposed major

subdivision. Application forms are available from the Planning Division and on the City of Concord web site. The following items, when submitted in an appropriate manner and executed, consist of a completed application:

(1) A completed application form endorsed by the owner or submitted by his agent where written authorization has been provided by the owner;

(2) An application fee as set forth in Appendix A. Fees, which is due and payable upon submission;

(3) An abutters list including a list of names and addresses of all abutters, as indicated in the records of the City Tax Assessor not more than five (5) days before the filing of the application;

(4) Five (5) copies of the plan drawings meeting the requirements, as set forth in Section 14.02, Design Review Phase Requirements; and

(5) An 8 1/2" by 11" reduction of the plan drawings.

8.06 ***Determination of Completeness:*** A completed application will contain the required information listed in Section 14.02, Design Review Phase Requirements and will be legible and competently prepared. If it is determined that the application is complete, the Board shall accept the application for consideration, which may take place at the same meeting as the determination of completeness. An application which is determined to be incomplete may be revised and resubmitted to a subsequent meeting of the Board for another determination of completeness. In making a determination of completeness, the Board shall consider the written recommendation of the City Planning Division, as well as any written communications from the applicant, abutters, and parties of interest; however, no hearing shall be opened nor shall testimony be received on a determination of completeness. The next available published deadline date shall constitute the official submittal date of the plat from which the statutory period for determination of completeness shall be calculated as set forth in NH RSA 676:4. Plats received prior to the deadline date shall be considered for completeness at the next scheduled regular meeting of the Planning Board after the deadline date. Continued Planning Board meetings and special meetings are not considered regular meetings of the Planning Board where an application can be determined complete.

8.07 ***Design Review Phase Consideration:***

(1) *Site Visit*: A site visit may be scheduled by the Planning Board to inspect the site of the proposed major subdivision, accompanied by the applicant or his/her representative. Temporary staking along the center line of all proposed roads in the subdivision will be required in time for such field trip or, if impractical, the Planning Board shall permit a suitable alternative procedure.

(2) *Board Action on the Design Review Phase*: Pursuant to 676:4 II(b), statements, comments, suggestions and recommendations made by the Planning Board are non-binding statements. Representations, comments, suggestions and alternatives made by the applicant or the applicant's agents are equally non-binding. After reviewing and discussing the design review plan, the Planning Division report and other reports as submitted by invited agencies and officials, the Planning Board may advise the applicant of the specific changes or additions, if any, in the layout and the character and extent of required improvements and reservations, which it will require as a prerequisite to the approval of the subdivision plat.

(3) *End of Design Review Phase*: The Design Review Phase shall be complete at the end of the public meeting, unless the Planning Board elects to table consideration of the Design Review Phase to allow the applicant to submit additional information and for additional staff review and comment. If, within 65 days of the tabling by the Board, the applicant has not submitted the requested information for further consideration by the Board, the Design Review Phase shall automatically be terminated. The one year vesting period, established pursuant to RSA 676:12 VI, shall commence at the close of the public hearing. Notice of the Planning Board decision shall be provided to the applicant pursuant to RSA 676:4.

SECTION 9 MINOR SUBDIVISION PROCEDURE

9.01 Planning Division Inquiry: Any applicant proposing to create a minor subdivision, as defined in these regulations, is encouraged to make an initial inquiry to the Planning Division to discuss classification of the subdivision, merits of the subdivision, and conformance with City Ordinances and Regulations including the Zoning Ordinance and Subdivision Regulations and to determine if any State or Federal regulations or permits may be applicable.

9.02 ***Minor Subdivision Application Requirements:*** The applicant shall file with the Planning Board, in accordance with the established application deadlines, a request for final plat approval of a minor subdivision. Application forms are available from the Planning Division and on the City of Concord web site. The following items, when submitted in an appropriate manner and fully executed, shall comprise a completed application:

(1) A completed application form endorsed by the owner or submitted by his/her agent where written authorization has been provided by the owner;

(2) An application fee as set forth in Appendix A. Fees, which is due and payable upon submission;

(3) An abutters list including a list of names and addresses of all abutters, as indicated in the records of the City Tax Assessor not more than five (5) days before the filing of the application;

(4) Five (5) copies of the final subdivision plat meeting the requirements, as set forth in Section 15, Minor Subdivision Requirements and in conformity to Chapter 4, Design Standards;

(5) Complete CUP application(s), where applicable;

(6) Copies of permit applications to State and Federal agencies, where applicable;

(7) An 8 1/2 " by 11" reduction of the subdivision plat; and

(8) Any request for waivers from the Subdivision Regulations, as set forth in Section 35.11, Waiver Petition.

9.03 ***Notice to Applicant, Abutters and Public:*** Based on the initial classification by the Clerk of the Board, the Planning Division shall notify the applicant, abutters, holders of conservation, preservation, and agricultural preservation restrictions, and every land surveyor, engineer, architect, and soil scientist whose professional seal appears on the final plat. The notice shall include a general description of the proposed subdivision, the applicant's name(s), and the time and location of the proposed hearing. Notice shall be mailed at least ten (10) days prior to the public hearing and consideration of the submission. The ten (10) day notice period shall not include the day the notice is mailed or

the day of the hearing. The Planning Board shall notify the public at the same time by posting the notice at two (2) locations.

9.04 ***Fees:*** Fees shall be required, as adopted from time to time by the Planning Board as set forth in Appendix A. Fees, herein.

9.05 ***Classification:*** The Planning Board shall confirm or reclassify the minor subdivision at a regularly scheduled meeting with notice that the final plat is on the agenda.

9.06 ***Determination of Completeness:*** Upon receipt of an application, the Board shall determine if the application is complete. The next available published deadline date shall constitute the official submittal date of the plat from which the statutory period for determination of completeness shall be calculated, as set forth in NH RSA 676:4. Plats received prior to the deadline date shall be considered for completeness at the next scheduled regular meeting of the Planning Board after the deadline date. Continued Planning Board meetings and special meetings are not considered regular meetings of the Planning Board where an application can be determined complete. A completed application will contain the required information listed in Section 15.01, Required Information, and Section 15.02, Plat Requirements, and will be legible and competently prepared. If it is determined that the application is complete, the Board shall then open the public hearing on said application. If it is determined that the application is incomplete, the Board shall specify the reasons the application is deemed incomplete and take no further action on said application. In making a determination of completeness, the Board shall consider the written recommendation of the City Planning Division, as well as any written communications from the applicant, abutters, and parties of interest; however, no hearing shall be opened nor shall testimony be received on a determination of completeness. An application which is determined to be incomplete may be revised and resubmitted to a subsequent meeting of the Board for another determination of completeness.

9.07 ***Public Hearing:*** The Planning Board shall hold a public hearing on the completed application. Notice of public hearing shall be given as described in Section 9.03, Notice to Applicant, Abutters and Public. Any abutter or any person with a direct interest in the matter may testify in person or in writing. Other persons may testify as permitted by the Board at each hearing.

9.08 Consideration of, and Action on, the Application:

(1) *Site Visit:* A site visit may be scheduled by the Planning Board to inspect the site of the proposed subdivision, accompanied by the applicant or his/her representative.

(2) *Period of Consideration*: The Board shall have sixty-five (65) days within which to consider and act on the application once it is determined complete. The sixty-five (65) day period shall commence upon the date of the regular meeting of the Board at which the application was accepted as complete. The applicant may request that the sixty five (65) day review period be extended. The applicant, may in writing or verbally at a public meeting of the Board, request that the Board's requirement to act within the sixty five (65) day period be waived.

(3) *Board Action on the Final Plat:* After the Planning Board has reviewed and considered the final plat and the Planning Division's reports, the applicant shall be advised of any required changes or additions. The Planning Board shall approve, modify and approve, or disapprove the subdivision application and shall set forth any conditions to which the approval is subject or State the grounds for disapproval for the record. The Clerk of the Planning Board shall notify the applicant in writing of the Planning Board's decision within five (5) business days commencing the next business day after the Board's decision.

(4) *Tabled Applications:* Any application which has been tabled pending submittal of additional information from the applicant or has been postponed at the request of the applicant, and for which no information has been submitted by the applicant within one (1) year from the date of tabling, or for which no further consideration is sought by the applicant within one (1) year from the date of postponement, shall be deemed to be withdrawn. A new application, together with a new fee, will be required for any further consideration by the Board of the subdivision.

(5) *Public and Common Private Improvements*: The Planning Board may require that all public and common private improvements be installed and completed prior to the signing of the subdivision plat by the Chair of the Planning Board. If the Planning Board does not require that all public improvements be installed and dedicated prior to signing of the subdivision plat by the Chair and Clerk of the Planning Board, a financial guarantee shall be provided to secure the installation of the

public and common private improvements. In accordance with the requirements of Section 30, Financial Guarantees, the amount of the financial guarantee shall be determined by the City Engineer, and the form and sufficiency of the financial guarantee shall be satisfactory to the City Solicitor.

(6) *Signing of the Plat:* The Chair and the Clerk of the Planning Board shall endorse each plan sheet of the plat after all conditions of approval have been satisfied, and all easements, deeds and performance guarantees have been provided in acceptable form and amount.

(7) *Recording of Plat:* One copy of the endorsed plat shall be placed on file in the Planning Division Office and one copy of the endorsed plan shall be kept in the City Engineering Office. It shall be the responsibility of the Clerk of the Planning Board to file the plat with the Merrimack County Registry of Deeds Office within thirty (30) days of the date of signature. Simultaneous with the filing of the plat, the Clerk of the Planning Board shall record such legal documents as shall be required to be recorded. Those conditions of approval set forth which remain to be fulfilled after the recording of the plat shall be duly noted on the plat.

(8) *Expiration of Approval*: Any approved plat not filed at the Merrimack County Registry of Deeds within two (2) years of the date of the final resolution of the Board shall be null and void.

(9) *Extension of Approvals*: At the request of the applicant, the approval of a minor subdivision may be extended for one (1) year by the Board. The Board may approve a second one-year extension, provided that the approved subdivision remains in compliance with the current zoning and subdivision regulations.

(10) *Building Permits and Certificates of Occupancy:* In accordance with Section 31.12, Issuance of Building Permits, no building permit or certificate of occupancy shall be issued within a subdivision until the plat has been approved, the conditions of plat approval have been satisfactorily addressed, and the plat recorded in the Merrimack County Registry of Deeds. In accordance with Section 31.13, Issuance of Certificates of Occupancy, no Certificate of Occupancy shall be issued within a subdivision until all requisite public improvements have been completed and accepted by the City.

SECTION 10 MAJOR SUBDIVISION PROCEDURE

10.01 ***Planning Division Inquiry:*** Any applicant proposing to create a major subdivision, as defined in these regulations, is encouraged to make an initial inquiry to the Planning Division to discuss classification of the subdivision, design and construction standards, merits of the subdivision, and conformance with City Ordinances and Regulations including the Zoning Ordinance and Subdivision Regulations, and to determine if any State or Federal regulations or permits may be applicable.

10.02 ***Major Subdivision Application Requirements:*** The applicant shall file with the Planning Board, in accordance with the established application deadlines, a request for final plat approval of a major subdivision. Application forms are available from the Planning Division and on the City of Concord web site. The following items, when submitted in an appropriate manner and executed, consist of a completed application:

(1) A completed application form endorsed by the owner, or submitted by his/her agent where written authorization has been provided by the owner;

(2) An application fee, as set forth in Appendix A. Fees, which is due and payable upon submission;

(3) An abutters list including a list of names and addresses of all abutters, as indicated in the records of the City Tax Assessor not more than five (5) days before the filing of the application;

(4) Eight (8) copies of the final subdivision plat, plans, and documents meeting the requirements, as set forth in Section 16, Major Subdivision Requirements and in conformity to Chapter 4, Design Standards;

(5) The results of any special investigative studies performed by the applicant, the review of the same by the Board's consultants, and the applicant's response to the review comments made by the Board's consultants;

(6) Complete CUP application(s) where applicable;

(7) Copies of permit applications to State and Federal agencies, where applicable;

(8) An 8 1/2 " by 11" reduction of the subdivision plat drawings exclusive of detail sheets, roadway cross sections, and utility profiles; and

(9) Any request for waivers from the Subdivision Regulations, as set forth in Section 35.11, Waiver Petition.

10.03 ***Notice to Applicant, Abutters and Public:*** Based on the initial classification by the Clerk of the Board, the Planning Division shall notify the applicant, abutters, holders of conservation, preservation, and agricultural preservation restrictions, and every land surveyor, engineer, architect, landscape architect and soil scientist whose professional seal appears on the final plat. The notice shall include a general description of the proposed subdivision, the applicant's name(s), and the time and location of the proposed hearing. Notice shall be mailed at least ten (10) days prior to the public hearing and consideration of the submission. The ten (10) day notice period shall not include the day the notice is mailed or the day of the hearing. The Planning Board shall notify the public at the same time by posting the notice at two (2) locations. Notice for the Board's Determination of Completeness shall be provided in the same manner as the notice for public hearing.

10.04 ***Fees:*** Fees shall be required, as adopted from time to time by the Planning Board as set forth in Appendix A. Fees, herein.

10.05 ***Classification:*** The Planning Board shall confirm or reclassify the major subdivision at a regularly scheduled meeting with notice that the final plat is on the agenda.

10.06 ***Determination of Completeness:*** Upon receipt of an application, the Board shall determine if the application is complete. The next available published deadline date shall constitute the official submittal date of the plat from which the statutory period for determination of completeness shall be calculated as set forth in NH RSA 676:4. Plats received prior to the deadline date shall be considered for completeness at the next scheduled regular meeting of the Planning Board after the deadline date. A completed application will contain the required information listed in Section 16, Application Requirements for Major Subdivisions and will be legible and competently prepared. Continued Planning Board meetings and special meetings are not considered regular meetings of the Planning Board where an application can be determined complete. If it is determined that the application is complete, the Board shall accept the application for consideration and set a date for the public hearing on the complete application no sooner than the next regular meeting of the Board after the deadline date. If it is determined that the application is

incomplete, the Board shall specify the reasons the application is deemed incomplete and take no further action on said application. In making a determination of completeness, the Board shall consider the written recommendation of the Clerk, as well as any written communications from the applicant, abutters, and parties of interest; however, no hearing shall be opened nor shall testimony be received on a determination of completeness. An application which is determined to be incomplete may be revised and resubmitted to a subsequent meeting of the Board for another determination of completeness.

10.07 ***Determination of Regional Impact*****:** Upon receipt of an application, the Board shall determine whether or not the application, if approved, could reasonably be construed as having the potential for regional impact pursuant to RSA 36:54. Doubt concerning the regional impact shall be resolved in a determination that the development has a potential impact. The Board shall determine an application to have the potential for regional impact on neighboring municipalities because of factors including, but not limited to, the following:

(1) Proximity of the subdivision to the municipal boundaries;

(2) Access to, and egress from, the subdivision via regional arterial routes, and/or local streets that cross municipal boundaries;

(3) Proximity of the subdivision to aquifers, surface waters, or other water resources that transcend municipal boundaries; and

(4) Proximity of the subdivision to existing public water supplies of other municipalities.

10.08 ***Public Hearing:*** The Planning Board shall hold a public hearing on an application determined to be of Regional Impact once an application has been determined complete. Notice of public hearing shall be given as described in Section 10.03, Notice to Applicant, Abutters and Public, except where an application has been determined to be of potential regional impact pursuant to Section 10.07, Determination of Regional Impact. Additional notification shall be provided to the Central New Hampshire Regional Planning Commission (CNHRPC) and those neighboring towns which the Board deems to be affected by the application. The notice for a development determined to be of potential regional impact shall be sent by certified mail at least fourteen (14) days prior to the date of the meeting. Any abutter or any person with a direct interest in the matter may testify in person or in writing. Other persons may

testify as permitted by the Board at each hearing. Where an application has been determined to be of potential regional impact, the CNHRPC and those towns which have been notified are deemed to have the status of abutters for the limited purpose of providing testimony.

10.09 Consideration of, and Action on, the Application

(1) *Site Visit:* A site visit may be scheduled by the Planning Board to inspect the site of the proposed major subdivision, accompanied by the applicant or his/her representative. Temporary staking along the center line of all proposed roads in the subdivision will be required in time for such field trip or, if impractical, the Planning Board shall permit a suitable alternative procedure.

(2) *Period of Consideration*: The Board shall have sixty-five (65) days within which to consider and act on the application once the application is determined complete. The sixty five (65) day period shall commence upon the date of the regular meeting of the Board at which the application was accepted as complete. The applicant may, in writing or verbally at a public meeting of the Board, request that the Board's requirement to act within the sixty five (65) day period be waived.

(3) *Board Action on the Final Plat:* After the Planning Board has reviewed and considered the final plat and Planning Division's reports, the applicant shall be advised of any required changes or additions. The Planning Board shall approve, modify and approve, or disapprove the subdivision application and shall set forth any conditions to which the approval is subject or state the grounds for disapproval for the record. The Clerk of the Planning Board shall notify the applicant in writing of the Planning Board's decision within five (5) business days commencing the next business day after the Board's decision.

(4) *Tabled or Postponed Applications:* Any application which has been tabled pending submittal of additional information from the applicant or has been postponed at the request of the applicant and for which no information has been submitted by the applicant within one (1) year from the date of tabling, or for which no further consideration is sought by the applicant within one (1) year from the date of postponement, shall be deemed to be withdrawn. A new application, together with a new fee, will be required for any further consideration by the Board of the subdivision.

(5) *Public and Common Private Improvements*: The Planning Board may require that all public and common private improvements be installed and completed prior to the signing of the subdivision plat by the Chair and the Clerk of the Planning Board. If the Planning Board does not require that all public improvements and common private improvements be installed prior to signing of the subdivision plat by the Chair and the Clerk of the Planning Board, a financial guarantee shall be provided to secure the installation of all public improvements and common private improvements. In accordance with the requirements of Section 30, Financial Guarantees, the amount of the financial guarantee shall be determined by the City Engineer, and the form and sufficiency of the financial guarantee shall be satisfactory to the City Solicitor.

(6) *Signing of the Plat:* The Chair and the Clerk of the Planning Board shall endorse each plan sheet of the plat after all pre-recording conditions of approval have been satisfied, and all easements, deeds and performance guarantees have been provided in acceptable form and amount.

(7) *Recording of Plat:* One copy of the endorsed plat shall be placed on file in the Planning Division Office and one copy of the endorsed plan shall be kept in the City Engineering Office. It shall be the responsibility of the Clerk of the Planning Board to file the plat with the Merrimack County Registry of Deeds Office within thirty (30) days of the date of signature. Simultaneously with the filing of the plat, the Clerk of the Planning Board shall record such legal documents as shall be required to be recorded. Those conditions of approval as set forth by the Planning Board which remain to be fulfilled after the recording of the plat shall be duly noted on the plat.

(8) *Expiration of Approval*: Any approved plat not filed at the Merrimack County Registry of Deeds within two (2) years of the date of the final resolution of the Board shall be null and void.

(9) *Extension of Approvals:* At the request of the applicant, the approval of a major subdivision may be extended for a two (2) year period by the Board. The Board may approve a second two (2) year extension provided that the approved subdivision remains in compliance with the current zoning and subdivision regulations.

(10) *Building Permits and Certificates of Occupancy:* In accordance with Section 31.12, Issuance of a Building Permit, no building permit or certificate of occupancy shall be issued within a subdivision until the plat has been approved, the conditions of plat approval have been satisfactorily addressed, and the plat recorded in the Merrimack County Registry of Deeds. In accordance with Section 31.13, Issuance of Certificates of Occupancy, no Certificate of Occupancy shall be issued within a subdivision until all requisite public improvements have been completed and accepted by the City of Concord.

10.10 Phasing of Major Subdivision Plats: Where a major subdivision is proposed to be phased, the applicant shall submit a phasing proposal which shall identify sections of the plat and a time frame for completion of each section. The Planning Board may alter the phasing proposal as conditions warrant.

(1) *Financial Guarantee*: Where the Planning Board requires a financial guarantee, it shall be in such an amount sufficient to insure the completion of the improvements required to be constructed within the subdivision phases to be recorded at the Merrimack County Registry of Deeds. The Planning Board may defer the guarantee for remaining phases until such phases are offered for recording.

(2) *Time Frame*: The time allowed for completion of each phase shall be as stipulated by the Planning Board and no phase shall exceed two (2) years in duration. In no case shall any proposed phasing plan in total exceed six (6) years.

(3) *Expiration of Later Phases*: The approval of all remaining phases not filed with the Merrimack County Registry of Deeds shall automatically expire, unless the expiring phase has been recorded in the Registry of Deeds within the number of years specified by the Planning Board. Prior to recording of subdivision plats by the City, all fees for each phase shall be paid; all instruments, easements and offers of dedication shall be properly executed, submitted and approved; all financial guarantees shall be received and approved; and all conditions of approval of the Planning Board which are pre-conditions of recording shall be satisfactorily completed.

SECTION 11 VOLUNTARY MERGER PROCEDURES AND REQUIREMENTS

11.01 Procedure for Voluntary Merger: An owner of two (2) or more contiguous existing lots or parcels who wishes to merge them may do so by applying to the Planning Division. The property ownership for the parcels must be the same for all parcels. Except where such merger will create a violation of City of Concord Ordinance or Regulation, all requests for Voluntary Merger shall be approved. No public hearing or notice is required for a Voluntary Merger. No such merged parcel shall thereafter be separately transferred without subdivision approval.

11.02 Delegation: The Planning Board on July 17, 1997, pursuant to RSA 674:39-a, delegated the review and approval for Voluntary Mergers to the Clerk of the Planning Board.

11.03 Application Requirements: The applicant shall file with the Planning Division a request for Voluntary Merger. A complete application is one which shall include the following:

(1) *Application Form*: An application form containing the following information:

(a) Owner's name, mailing address and telephone number;
(b) Tax Assessor's Map-Block–Lot number for each parcel;
(c) Tax Assessor's Tract number(s) for each parcel;
(d) Title reference by Book & Page number in the Merrimack County Registry of Deeds for each parcel;
(e) Street address or address range for each parcel; and
(f) Owner's signature.

(2) *Deeds*: A copy of the current deed for each parcel shall be provided.

(3) *Fees*: An application fee as set forth in Appendix A. Fees, which is due and payable upon submission.

11.04 Survey Drawings: If a boundary survey is to be recorded at the request of the applicant, the survey drawing shall conform to the requirements of the Merrimack County Registry of Deeds.

11.05 Approval: Once the Clerk of the Board has determined the application to be complete, that the information submitted is accurate, and that the Voluntary

Merger will not create a violation of a City Ordinance or Regulation, the Clerk shall approve the application.

11.06 ***Recording of Documents***: Once the Clerk has approved the application, the Planning Division shall prepare the Notice of Lot Consolidation. The property owner and the Clerk of the Planning Board shall sign said notification. It shall be the responsibility of the Clerk to record said notification and any accompanying survey drawing at the Merrimack County Registry of Deeds within thirty (30) days of the date of signature.

Subdivision Regulations

Chapter 3
Application Requirements

SECTION 12	General Requirements for All drawings
SECTION 13	General Requirements for Documentation
SECTION 14	Application Requirements for Preliminary Conceptual consultation Phase and Design Review Phase
SECTION 15	Application Requirements for Minor Subdivisions
SECTION 16	Application Requirements for Major Subdivisions
SECTION 17	Special Provisions for Condominium Subdivisions
SECTION 18	Special Provisions for Comprehensive Development Plans

SECTION 12 General Requirements for All drawings

12.01 ***Research*** : The applicants shall familiarize themselves with all City, State and Federal regulations relative to zoning, subdivision, land sales, utilities, drainage, health, buildings, roads and other pertinent data so that the applicant is aware of the obligations, standards expected, and documents to be submitted.

12.02 ***All Plans*****:** The following information shall be required on all plans, plats and drawings for minor subdivisions, design review plans, major subdivisions and CDPs:

(1) *Title Block*:
- (a) Title of plan;
- (b) Name and address of the owner and applicant;
- (c) The date the plan was prepared and date of subsequent revisions; and
- (d) Name, address, seal and signature of the licensed professional who prepared the plan or plat.

(2) *Scale*.

(3) *Standard Notes* as set forth in Appendix B.

(4) *Conditions of Planning Board Approval* which remain to be fulfilled after the recording of the plat.

12.03 ***Plats and Construction Plans:*** The following information shall be required on plat drawings and construction plans as noted below:

(1) *North Arrow and Bar Scale* shall be provided on all construction plans, subdivision plans and plats, but are not required on construction details, roadway, cross-sections and profile drawings;

(2) *Plats*. A NH Licensed Land Surveyor shall prepare the subdivision plat and shall certify the Error of Closure;

(3) *Planning Board Approval Block* shall be provided on all subdivision plats, but is not required for construction plans and details;

(4) *Construction Plan Drawings* shall be prepared by a NH Licensed Professional Engineer who shall sign and seal each construction plan drawing, except for landscape plans which shall be prepared by a NH Licensed Landscape Architect who shall sign and seal the landscape plan(s);

(5) *Wetland* boundaries shall be delineated by a NH Certified Wetland Scientist who shall sign and seal the plan upon which the wetland boundaries are mapped; and

(6) *Soils.* Where soils are required to be mapped, the identification, classification, and delineation shall be performed by a NH Certified Soil Scientist who shall sign and seal the plan upon which the soils are mapped.

***12.04 Location Plan*:** Each subdivision application shall have on the subdivision plat, or a cover sheet, a detailed location plan prepared at a minimum scale of 1″= 400′ showing clearly the following information:

(1) Proposed subdivided property;
(2) Property lines existing prior to subdivision applications;
(3) Abutter's property lines;
(4) Names and locations of nearby and adjacent City streets;
(5) Names and locations of adjacent water bodies and watercourses;
(6) Names and locations of nearby and adjacent parks, schools, churches, and other significant physical and man-made features;
(7) Nearest street intersections;
(8) The tax assessor's map, block and lot number for abutters and the properties to be subdivided;
(9) Zoning district designations and boundaries; and
(10) Other special information which may be required by the Planning Board.

12.05 Vicinity Plan: Each subdivision application shall have on the subdivision plat or the cover sheet a vicinity plan prepared at a scale between 1″= 1000′ and 1″= 2000′ clearly showing the following:

(1) The location of the subdivision plat; and
(2) Streets, water bodies, city limits, parks, schools, and other significant physical and man-made features.

12.06 Plan References: The following references shall be included on the subdivision plat:

(1) *Certificate of Ownership*: A certificate of ownership identifying each parcel, including which property is owned by each owner and a deed citation for each deed from the Merrimack County Registry of Deeds;

(2) *Easements*: Plan or deed references for recorded easements, whether public or private, on the properties proposed for subdivision and existing easements on abutting properties, which are for the purposes of providing access, utilities and drainage to the properties proposed to be subdivided;

(3) *Existing Restrictions*: Deed reference and statement of any existing recorded covenants or restrictions relating to the use of the land proposed to be subdivided;

(4) *Prior Subdivisions or Surveys*: Plan references for prior recorded subdivisions or surveys on the properties proposed for subdivision or abutting said properties proposed to be subdivided; and

(5) *Other Plans:* Plan references for applicable road, utility or site improvement plans, which are available in City records or are available to the surveyor for establishing property and easement boundaries.

12.07 Wetland Delineations: Wetland delineations are to be prepared by a NH Certified Wetland Scientist who shall sign and seal the existing condition plan and subdivision plat. The date of the wetland delineation shall be noted on the plans.

12.08 Existing Conditions Plan: Existing conditions may be shown on the final plat for a minor subdivision, if the existing and new information can be legibly and clearly shown. The existing condition plan shall contain the following information:

(1) *Property Lines:* The property lines of the parcels to be subdivided;

(2) *Abutters:* The full names and addresses of all property owners and abutters as indicated in the records of the City Tax Assessor not more than five (5) days before the filing of the application, and the Tax Assessor's Map-Block-Lot number for each parcel;

(3) *Topography:* Existing topographic conditions and all proposed changes in ground elevation at a contour interval of two (2) feet, as referred to sea level datum of the North American Vertical Datum 1988 (NAVD88). Where the land slopes less than two percent (2%), spot elevations shall be shown at all breaks in grade, along all drainage channels or swales, and at selected points not more than one hundred (100) feet apart in all directions. For minor subdivisions with large remnant parcels and for

open space parcels where no development is proposed, the Clerk may allow the applicant to submit topographic information for only that portion of the site to be developed or redeveloped, or where site construction may occur;

(4) *Soils:* The identification and classification of the extent and type of soils using the USDA Natural Resources Conservation Service system;

(5) *Natural Features:* The location of all significant natural features including, but not limited to, ledge outcroppings, streams and water bodies, wetlands, bluffs and ravines, and steep slopes in excess of fifteen (15%) percent and twenty-five (25%) percent;

(6) *Community Features:* Existing adjacent public buildings, parks or open space, or any historic structures or features;

(7) *Buildings and Structures*: The location, layout, and use of existing buildings and structures with exterior dimensions;

(8) *Parking, Loading and Access*: The location and layout of existing driveways, curb cuts, parking lots, and loading areas;

(9) *Easements or Right-of-way*: The location, dimensions, and purpose of any easements or rights-of-way within or adjacent to the subdivision;

(10) *Municipal Utilities:* The location, size, material, and type of municipal utilities currently serving the subdivision, including all structures, valves, hydrants, meters, and other appurtenances;

(11) *Non-municipal Utilities:* The location, type and size, where applicable, of the non-municipal utilities which currently serve the subdivision, including transformers, switch boxes, and other appurtenances;

(12) *Wells and Septic Systems:* The location of existing wells and subsurface waste disposal systems on the property and on immediately adjacent property, if new wells and septic systems are proposed;

(13) *Flood Hazard:* A notation as to whether or not the property is located in a FH – Flood Hazard Zoning Overlay District. The location of the boundary line of the Flood Hazard District if it transects the property, and the required finished floor elevation if all or a portion of the property is located within a flood hazard area;

(14) *Aquifers:* Where present, the boundaries and label for each Water Systems Protection Area established in Article 28-3-6, Aquifer Protection (AP) Overlay District of the City of Concord Zoning Ordinance;

(15) *Shoreland Protection:* Where present, the boundary of the Shoreland Protection (SP) Overlay District and the boundaries and label for the Natural Vegetative and Woodland Buffers established in Article 28-3-3, Shoreland Protection (SP) Overlay District of the City of Concord Zoning Ordinance;

(16) *Signs:* The location and size of existing ground signs;

(17) *Solid Waste and Outside Storage:* The type and location of existing solid waste disposal facilities. All existing outside storage areas noting dimensions, height, and types of material or equipment stored;

(18) *Lighting:* The type and location of existing outdoor lighting;

(19) *Setbacks and Buffers*: Setbacks and buffers shall be shown and dimensioned, including wetland buffers, Shoreland Protection District buffers, buffers to bluffs, and Residential District buffers;

(20) *Existing Vegetation:* The location, type, and size of existing trees on the site, or in the case of heavily wooded portions of the site, the edge of clearing;

(21) *Restrictions*: Each subdivisions shall contain notations of all covenants, easements, self-imposed restrictions, and any other restrictions in place at the time of application;

(22) *Abutting Properties:* Existing abutting properties, including intersecting property lines, buildings, driveways, wells, and septic systems;

(23) *Tabulations:* The following tabulations including:

(a) Gross acreage in square feet and acres;
(b) Square footage of each existing building broken down by floor and use category;
(c) Impervious surface coverage in square feet and percent;

(d) Useable land area calculations for residential development and net land area calculations for non-residential development; and,

(e) Other tabulations that may be required by the Clerk in order to determine compliance with the City's Zoning Regulations or Subdivision Regulations.

(24) *Zoning:* Zoning District Boundary lines, including Overlay Districts with labels.

12.09 Electronic Submission: Prior to the recording of the plat, digital information from the plat shall be provided to the City Engineer for incorporation into the City of Concord Geographic Information System (GIS) and tax maps. The digital information shall be submitted in a format and media conforming to standards promulgated by the City Engineer. The following layers shall be submitted referencing New Hampshire State Plane Grid Coordinates and shall be based on National American Vertical Datum 1988 (NAVD 88):

(1) Right-of-Way lines with bearings and dimensions;
(2) Property lines with bearings and dimensions;
(3) Conservation easements with bearings and dimensions;
(4) Water bodies, including the edges of lakes, ponds, rivers and streams;
(5) Wetlands;
(6) Utility, drainage and slope easements;
(7) Shoreland Protection District boundaries, and,
(8) Wetland buffers, ravines and bluffs, and buffers to bluffs.

SECTION 13 General Requirements for Documentation

***13.01 All Applications*:** The following information is required for all subdivision applications except for Preliminary Conceptual Consultation Phase:

(1) *Authorization of the Property Owner:* The applicant for subdivision review must either own the fee simple interest in the property(s) that is the subject of the review or have written permission of the fee simple owner. All applications shall include written evidence that the fee simple owner of the property is aware of the application and does not object to the application being made. Evidence shall include either the owner's signature on the application or a letter signed by the owner authorizing the submittal of the application;

(2) *Application Form:* A completed application form endorsed by the owner, or submitted by his/her agent where written authorization has been provided by the owner. A copy of the owner's written authorization needs to be attached to those applications signed by the agent;

(3) *Application Fees*: Application fees as set forth in Appendix A. Fees, which are due and payable upon submission or prior to recording of any documents or plans;

(4) *Abutters List:* An abutters list including a list of names and addresses of all abutters as indicated in the records of the City Tax Assessor not more than five (5) days before the filing of the application;

(5) *Zoning Board of Adjustment Actions*: A copy of any actions by the Zoning Board of Adjustment on requests for special exceptions or variances from the City of Concord Zoning Ordinance;

(6) *State and Federal Permits*: A copy of any application made to a State or Federal agency required for the approval of this subdivision, including those required for the development of the individual lots;

(7) *Phasing Plan*: A statement describing the proposed phasing of the subdivision, including the time frame, percentage of total residential and non-residential uses, and the improvements and facilities to be provided in each stage;

(8) *Impact Studies*: The following studies where required in Section 32, Special Investigative Studies – Third Party Review, and Section 33, Traffic Impacts and Traffic Studies, herein, or as may be specifically required by the Planning Board in order to satisfactorily complete its review of a proposed application:

(a) Drainage study;
(b) Wetland study;
(c) Traffic study;
(d) Water and/or sewer studies;
(e) Soil tests and soil survey including borings;
(f) School impact study; and
(g) Other studies as may be required from time to time by the Planning Board; and

(9) *Special Investigative Studies or Third Party Reviews:* Special Investigative Studies pursuant to RSA 676:4 I(g) or Third Party Review pursuant to RSA 676:4-b for all or a portion of a subdivision application, or impact study, shall be provided where required in accordance with Section 32, Special Investigative Studies – Third Party Review, of these regulations, or as may be specifically required by the Planning Board in order to satisfactorily complete its review of a proposed application.

13.02 Documentation Required Prior to Recording of Plans: Three (3) copies of the following documents are required to be submitted to the Planning Division for review and approval prior to the endorsement of the plat by the Chair and the Clerk of the Planning Board. Once approved by the Planning Board Clerk, the City Engineer, and the City Solicitor as to form and content, properly executed easement documents and agreements shall be submitted for recording with the plat:

(1) *Right-of-Way Easement:* Deeds of Easement for any new, extended or expanded right-of-way of any public street shown on the plan or required to be dedicated by the Planning Board. The format of right-of-way easements shall conform to the sample contained in Appendix C, Easements and Legal Documents;

(2) *Utility, Drainage and Slope Easements*: Deeds of Easements for new, extended or expanded utility and drainage rights-of-way located outside of any existing or proposed street right-of-way including slope easements, and flowage easements for drainage across property not within a defined pipe, channel or watercourse. The format of utility and drainage right-of-way easements and slope easements shall conform to the sample contained in Appendix C, Easements and Legal Documents;

(3) *Open Space*: Warranty Deeds or Conservation Easements for land to be set aside for open space purposes and/or required by the Planning Board to protect environmentally sensitive lands such as streams, steep slopes or wetlands;

(4) *Other Public Easements*: Warranty Deeds or Deeds of Easement for any other public use shown on the plat or required by the Planning Board;

(5) *Municipal Utility Extension*: Where required, approval from City Council for the extension of municipal utilities;

(6) *City Council Approvals*: Where applicable, licenses from City Council to use public property or rights-of-way;

(7) *Financial Guarantee for Public and Common Private Improvements*: Construction cost estimates shall be submitted and approved by the City Engineer prior to submission of a financial guarantee. A financial guarantee for all public improvements and required common private facilities in the full amount of the construction cost estimate approved by the City Engineer, and in a form acceptable to the City Solicitor shall be submitted prior to the plat being endorsed by the Chair and the Clerk of the Planning Board;

(8) *Publicly Funded Improvements*: Where required improvements are to be fully or partially funded by the City of Concord or other governmental authority, a fully executed public improvement or development agreement shall be provided;

(9) *Agreement to Convey a Private Easement*: An agreement to convey a private easement shall be provided where easements or common facilities are to benefit the future owners of the individual lots including, but not limited to, vehicular and pedestrian access, drainage, utility, and access for maintenance purposes. The format of an agreement to convey an easement shall be approved by the City Solicitor and the Clerk of the Planning Board shall conform to the format contained in Appendix C, Easements and Legal Documents, and shall be recorded in the Merrimack County Registry of Deeds with the subdivision plat;

(10) *State and Federal Permits*: Copies of all required State and Federal permits;

(11) *Condominiums*: As required in Section 17, Special Provisions for Condominium Subdivisions;

(12) *Property Owners' Associations*: For subdivisions where some form of property owners' association will own and/or control common areas of the subdivision, copies of all proposed deed restrictions, covenants, and articles of incorporation and bylaws; and

(13) *Recording Fees*: The recording fees required by the Merrimack County Registry of Deeds, or the State of NH, for all plans and documents to be recorded.

SECTION 14 APPLICATION REQUIREMENTS FOR PRELIMINARY CONCEPTUAL CONSULTATION PHASE AND DESIGN REVIEW PHASE

***14.01 Preliminary Conceptual Consultation Phase Requirements*:** Five (5) copies of the required Preliminary Conceptual Consultation Phase plans and documents shall be submitted. The following information is required at a minimum:

(1) *Application Form*: A completed application form endorsed by the owner, or submitted by his/her agent where written authorization has been provided by the owner;

(2) *Location & Vicinity Plan*: A location plan as set forth in Section 12.04, Location Plan and a vicinity plan as set forth in Section 12.05, Vicinity Plan clearly showing the parcel(s) where the proposed uses are contemplated and the context of the proposal; and

(3) *Applicant's Statement:* The applicant shall submit in writing a statement of the proposed use indicating the types and densities of any residential and non-residential development, including accessory uses. The applicant shall include within the statement a description of those issues and policies contained within the Master Plan that the applicant wishes to discuss with the Planning Board, as well as any issues associated with the existing and planned extension of public utilities and infrastructure.

***14.02 Design Review Phase Requirements*:** Five (5) copies of the Design Review plans and documentation shall be submitted. The following information is required at a minimum:

(1) *Required Information*: The following information is required for each design review phase application:

(a) *Authorization of the Property Owner*: The applicant for subdivision review must either own the fee simple interest in the property(s) that is the subject of the review or have written permission of the fee simple owner. All applications shall include written evidence that the fee simple owner of the property is aware of the application and does not object to the application being made. Evidence shall include either the owner's signature on the

application or a letter signed by the owner authorizing the submittal of the application;

(b) *Application Form*: A completed application form endorsed by the owner, or submitted by his/her agent where written authorization has been provided by the owner. A copy of the owner's written authorization needs to be attached to those applications signed by the agent;

(c) *Application Fees*: Application fees as set forth in Appendix A. Fees, which are due and payable upon submission;

(d) *Abutters List*: An abutters list including a list of names and addresses of all abutters as indicated in the records of the City Tax Assessor not more than five (5) days before the filing of the application;

(e) Boundary and topographic plan from either a site survey or the City's Geographic Information System (GIS) or other approved source; and

(f) All items set forth in Section 12, General Requirements for All Drawings.

(2) *Project Statement*: A statement describing the proposed phasing of the subdivision including the time frame, percentage of total residential and non-residential uses, and the improvements and facilities, included in each stage;

(3) *Site Analysis Plan*: The site analysis plan shall contain all the following information:

(a) Natural Features: The following information both on and adjacent to the site to be subdivided:

i. Identification of wetlands and wetland buffers;
ii. Vegetation survey showing fields, swamplands, wetlands, grasses, shrubs and trees (deciduous and evergreen);
iii. Rock outcrops, ledges, surface water, streams, seasonal or permanent water bodies or water courses including any known flood elevations as well as identification of high water marks;

iv. Important views of and from the site;
v. Orientation to the sun and direction of prevailing winds;
vi. Contour lines at a minimum of two (2) foot intervals with ten (10) foot contour intervals highlighted;
vii. Slopes in excess of fifteen percent (15%) and in excess of twenty five percent (25%);
viii. Identification of bluffs and buffers to bluffs;
ix. Identification and classification of the extent and types of soils using the USDA Natural Resource Conservation Service System;
x. Wellhead protection zones;
xi. Wetland Delineation;
xii. Wetland buffers; and
xiii. Shoreland Protection Overlay District boundaries and natural vegetative and woodland buffers.

(b) Man-made Features: The following items, both on and adjacent to the site to be subdivided, are required to be shown at a minimum, but are not exclusive:

i. Location of utilities, including any specific rights-of-way, the size of sanitary sewers, water mains, storm sewers, including surface and subsurface drainage systems, and non-municipal utilities including overhead transmission lines;
ii. Identification of municipal special district boundaries;
iii. Location and purpose or use of building and structures;
iv. Location of walls, fences and wells;
v. Public streets and highways and mapped future streets as defined on the Official Map;
vi. Railroad tracks and rights-of-way, and airport approach zones;
vii. Driveways, curb cuts, and parking lots;
viii. Any historic structures or sites listed or eligible for the National or State Registers of Historic Places, and any historic markers;
ix. Any cemeteries, stone walls or foundations, or known archeological sites; and
x. Public and private recreation areas, parks, and open space.

(c) Proposed highways or other major public improvements planned by public authorities for future construction on or in proximity to the site;

(d) Planned private improvements on or in proximity to the site, including any previously approved subdivision;

(e) Any other significant man-made or natural features which have relevance to the development of the site; and

(f) Photographs of the site showing existing features and conditions. Notes shall be made of camera locations, direction, view, and key numbers.

(4) *Proposed Site Layout Plan*: A proposed site layout plan or conceptual subdivision layout plan showing:

(a) The approximate location, width, and lengths of proposed streets;

(b) The approximate location and distribution of proposed lots, buildings, and structures;

(c) Tabulations of the gross land area, buildable land area, number of lots, range of lot sizes, required open space, number of dwelling units, residential density, approximate square footage of non-residential uses, and approximate lot coverage of buildings and impervious surfaces;

(d) The approximate location and area of all parcels of open space land proposed to be set aside for park or playground use, other public use, or for the use of property owners in the proposed subdivision; and

(e) Any proposed impacts to wetlands and bluffs and buffers to bluffs and wetlands.

(5) *Site Utility and Drainage Layout Plan*: A site utility and drainage layout plan shall show the following:

(a) The location of existing sanitary sewers and or on-site septic systems, water mains and/or potable wells, and existing utility poles;

(b) Existing utility rights-of-way;

(c) Existing drainage facilities and the approximate layout of all proposed storm drainage facilities, including detention and retention ponds and drainage swales;

(d) Preliminary proposals for connection with existing water supply and sanitary sewage systems or alternative means of providing water supply and sanitary waste treatment and disposal; and

(e) Existing non-municipal utilities on or adjacent to the site and the approximate layout of non-municipal utilities proposed.

(6) *Other Requirements*: The Board may require further detailing of information and additional meetings, before advising the applicant to proceed with a formal application for a major subdivision.

SECTION 15 APPLICATION REQUIREMENTS FOR MINOR SUBDIVISIONS

15.01 Required Information: Three (3) copies of the following supporting documents and information are required at a minimum for each minor subdivision application, unless otherwise specified herein:

(1) All items set forth in Section 12, General Requirements for All Drawings, and Section 13.01, All Applications, as maybe required except for impact studies required in Section 13.01(8);

(2) All items set forth in Section 13.02, Documentation Required Prior to Recording of Plans, as may be required by the Clerk of the Planning Board;

(3) A wetland delineation and wetland buffers where applicable;

(4) Five (5) final plat drawings, as set forth in Section 15.02 Plat Requirements, Section 15.03, Information to be Provided on Plat, and Section 15.04, Other Requirements;

(5) Construction drawings, as set forth in Section 16.04, Construction Plans, as may be required by the Clerk of the Board;

(6) Impact studies set forth in Section 13.01(8), as determined by the Clerk of the Board, which will generate new information of assistance to the Board in consideration of the application; and

(7) Where CUPs are required in conjunction with a proposed subdivision, a completed CUP application for each CUP requested shall be made at the same time as the subdivision application. Where a CUP is required, no subdivision application may be considered complete without a complete CUP application. CUP applications will be considered concurrently with the subdivision application.

15.02 Final Plat Requirements: The following shall govern the preparation of the final plat drawings:

(1) *Licensed Land Sur*veyor: The final plat shall be prepared, signed and stamped by a NH Licensed Land Surveyor in a format suitable for filing in the Merrimack County Registry of Deeds;

(2) *Copies*: Five (5) copies of the final plat shall be submitted with the application;

(3) *Scale*: Minor subdivision plats may be submitted at scale of 1″= 20′, 1″= 30′, 1″= 40″, 1″= 50′, or 1″= 60′ provided that the Clerk of the Planning Board finds the scale to be appropriate for depicting the proper information. The scale of the plat submittal may be required to be adjusted or details provided at a larger scale if, in the opinion of the Clerk, the larger scale is needed to properly review all details of the plan;

(4) *Large Parcels*: In cases of parcels over ten (10) acres in size, the Clerk may authorize the applicant to submit all, or a portion, of a plat at another engineering scale such as 1″= 100′, provided all pertinent information can be shown accurately and legibly;

(5) *Approval Block*: The standard Planning Board approval block shall be provided on the plan;

(6) *Error of Closure*: The error of closure for the subdivision shall not be less than 1 in 10,000;

(7) *Lot Numbers*: All lots shall be sequentially numbered. For existing lots, the City Tax Assessors Map-Block-Lot numbers shall be used;

(8) *Addresses*: The address of each existing and proposed lot shall be noted on the plat as approved by the City Engineer;

(9) *Proposed Use*: Each plat shall include a statement of the proposed type of residential use of any lot (single-family, duplex, multi-family, townhouse) and all uses other than residential proposed by the applicant;

(10) *Easements and Restrictions*: Each plat shall contain notations of all easements covenants, self-imposed restrictions, and any other restrictions or notations required by the Board;

(11) *Multiple Sheets*: In the event multiple sheets are required, match lines shall be established so that all lots, proposed or existing, are entirely shown on a sheet. A single lot shall not be broken up and shown on multiple sheets unless said lot exceeds ten (10) acres in size. Match lines should follow property lines or right-of-way lines; and

(12) *Registry Requirements*: The Merrimack County Registry of Deeds has specific requirements for all plats to be recorded including materials, font size, plan size, margins, and plat layout. The applicant is responsible for ensuring that all plats to be recorded are in compliance with the current standards of the Merrimack County Registry of Deeds.

15.03 Information to be Provided on Final Plat: The following information is required to be accurately shown or noted on the plat drawing for all minor subdivisions:

(1) *Abutting Property:* Existing abutting properties including property lines, buildings, wells and septic systems, owner's names and addresses, property addresses, and Tax Assessors Map-Block-Lot numbers;

(2) *Dimensions*: The dimensions and bearings of all existing property lines and new property lines to be created. Property lines to be removed must be clearly distinguished from all new and remaining property lines;

(3) *Tabulations*: The areas of each lot in square feet and/or acres for new and existing lots, expressed to the nearest square foot and/or nearest hundredth of an acre. The area of contiguous buildable land shall be noted for each lot and shown on the plat drawing;

(4) *Topography*: Existing topographic conditions and all proposed changes in ground elevation at a contour interval of two (2) feet , as referred to the sea level datum of the North American Vertical Datum 1988 (NAVD88). Where the land slopes less than two percent (2%), spot elevations shall be shown at all breaks in grade, along all drainage channels or swales, and at selected points not more than one hundred (100) feet apart in all directions;

(5) *Monumentation*: The type and location of existing and required monuments (bounds) at the corners of lots, at points of curvature, tangency, and deflection points along the street rights-of-way;

(6) *Natural Features*: The location of all significant natural features including, but not limited to, ledge outcroppings, streams and water bodies, wetlands, bluffs and ravines, steep slopes in excess of fifteen percent (15%) and twenty five percent (25%);

(7) *Zoning*: Zoning District Boundary lines, including Overlay Districts with labels;

(8) *Setbacks:* Setbacks shall be shown and dimensioned including those required for yards, the Shoreland Protection District, as well as Bluff and Wetland buffers and setbacks;

(9) *Access and Driveways*: All existing and proposed driveways along the subdivision frontage, on abutting properties and on the opposite sides of the street;

(10) *Site Improvements*: The location of existing and proposed improvements on the site and on abutting properties including, but not limited to, driveways, parking, buildings and structures, railroads, parks, and other pertinent features as determined by the Clerk of the Board;

(11) *Municipal Sewer*: The location, size, rim, and invert elevations of existing and proposed sanitary and storm sewers including manholes, catch basins, and culverts;

(12) *Septic Systems*: Where municipal sewer service is not available, soil data and test results sufficient to submit an application for subdivision approval to the State of NH Department of Environmental Services (NHDES), including a plan showing the location of test pits, the soil profiles, ground water elevation, and seasonal high water table elevation at each test pit. The required 4,000 square foot septic drain field area required by the NHDES shall be shown on the subdivision plat;

(13) *Municipal Water Supply*: The location and size of all existing and proposed water mains including hydrants, gates, valves, and blowoffs;

(14) *Wells*: Where the municipal water system is not available, the location of all existing and proposed wells and required wellhead protection radii on the site and abutting properties;

(15) *Other Utilities*: The location and size of all existing and proposed underground and overhead non-municipal utilities;

(16) *Easements*: The location, width, and metes and bounds description of all existing and proposed easements and other rights-of-way, except for slope and temporary grading and construction easements;

(17) *Conditions of Approval*: Pursuant to RSA 676:3 III, prior to the plat being recorded, those conditions of approval as set forth by the Planning Board which remain to be fulfilled after the recording of the plat shall be duly noted on the plat; and

(18) *Cluster and Open Space Subdivisions*: The required open space calculations shall be noted on the plan and the protected open space areas shall be shown on the plan, with metes and bounds descriptions, bounds provided, and the size of each area noted.

15.04 ***Other Requirements***: The Board may require additional information, as set forth in Section 16, Application Requirements for Major Subdivision.

SECTION 16 APPLICATION REQUIREMENTS FOR MAJOR SUBDIVISIONS

16.01 ***Required Information*** The following information is required at a minimum for each major subdivision application:

(1) All items set forth in Section 12, General Requirements for All Drawings, and Section 13.01, All Applications. In Section 13.01 (8), the Impact Studies which shall be required are those, as determined by the Clerk of the Board, which will generate new information of assistance to the Board in consideration of the application;

(2) All applicable items in Section 13.02, Documentation Required Prior to Recording of Plans, to be submitted after Planning Board approval of the application, and prior to recording of the subdivision, or the start of any site construction;

(3) All items set forth herein, in Section 16, Application Requirements for Major Subdivision;

(4) A wetland delineation where applicable; and

(5) Where CUPs are required in conjunction with a proposed subdivision, a completed CUP application for each CUP requested shall be made at the same time as the subdivision application. Where a CUP is required, no subdivision application may be considered complete without a complete CUP application. CUP applications will be considered concurrently with the subdivision application.

(6) Where a subdivision plat is submitted on multiple sheets, an Overview Plan shall be submitted showing the entire subdivision on a maximum sheet size of 24″ x 36″, suitable for presentation at a public meeting. Said plan shall also be provided in a digital format acceptable to the Clerk of the Board.

16.02 Final Plat Requirements: The following shall govern the preparation of the final plat drawings:

(1) *Licensed Land Sur*veyor: The final plat shall be prepared, signed, and stamped by a NH Licensed Land Surveyor in a format suitable for filing in the Merrimack County Registry of Deeds;

(2) *Copies*: Eight (8) copies of the final plat shall be submitted with the application;

(3) *Scale*: Major subdivision plats may be submitted at scale of 1″= 20′, 1″= 30′, 1″= 40″, 1″= 50′, or 1″= 60′ provided that the Clerk of the Board finds the scale to be appropriate for depicting the proper

information. When necessary, the plat shall be on several sheets, accompanied by an overall plan showing the entire subdivision, and sheet boundaries. The overall plan shall be at a suitable scale for review by abutters and for display purposes. The scale of the plat submittal may be required to be adjusted, or details provided at a larger scale if, in the opinion of the Clerk, the larger scale is needed to properly review all details of the plan;

(4) *Large Parcels*: In cases of parcels over ten (10) acres in size, the Clerk may authorize the applicant to submit all, or a portion, of a plat at another engineering scale such as 1"= 100', provided all pertinent information can be shown accurately and legibly;

(5) *Approval Block*: The standard Planning Board approval block shall be provided on the plan;

(6) *Error of Closure*: The error of closure for the subdivision, including existing and proposed lots, shall not be less than 1 in 10,000;

(7) *Lot Numbers*: All lots shall be sequentially numbered. For existing lots the City Tax Assessors Map-Block-Lot numbers shall be used;

(8) *Street Names and Addresses*: The names of all proposed new streets shall be approved by the Board and noted on the plat. The address of each existing and proposed lot shall be noted on the plat as approved by the City Engineer;

(9) *Proposed Use*: Each plat shall include a statement of the proposed type of residential use of any lot (single-family, duplex, multi-family, townhouse) and all uses other than residential proposed by the applicant;

(10) *Restrictions*: Each plat shall contain notations of all covenants, easements, self-imposed restrictions, and any other restrictions or notations required by the Board;

(11) *Phasing*: For phased developments, the plat shall show the subdivision in its entirety. The phase for which final approval is being sought shall be so designated on the plat by reference to lot or unit numbers or other graphic technique as approved by the Board;

(12) *Multiple Sheets*: In the event multiple sheets are required, match lines shall be established so that all lots, proposed or existing, are entirely

shown on a sheet. A single lot shall not be broken up and shown on multiple sheets unless said lot exceeds ten (10) acres in size. Match lines should follow property lines or right-of-way lines; and

(13) *Registry Requirements*: The Merrimack County Registry of Deeds has specific requirements for all plats to be recorded including materials, font size, plan size, margins, and plat layout. The applicant is responsible for ensuring that all plats to be recorded are in compliance with the standards of the Merrimack County Registry of Deeds.

16.03 Information to be Provided on Final Plat: The following information is required to be accurately shown or noted on the plat drawing for all major subdivisions:

(1) *Abutting Property:* Existing abutting properties including property lines, buildings, wells and septic systems, owners' names and addresses, property addresses, and Tax Assessors Map-Block-Lot numbers;

(2) *Dimensions*: The dimensions and bearings of all existing property lines and new property lines to be created. Property lines to be removed must be clearly distinguished from all new and remaining property lines;

(3) *Tabulations*: The areas of each lot in square feet and/or acres for new and existing lots, expressed to the nearest square foot and/or nearest hundredth of an acre. The area of contiguous buildable land shall be noted for each lot and shown on the plat drawing;

(4) *Topography*: Existing topographic conditions and all proposed changes in ground elevation at a contour interval of two (2) feet, as referred to the sea level datum of the North American Vertical Datum 1988 (NAVD88). Where the land slopes less than two percent (2%), spot elevations shall be shown at all breaks in grade, along all drainage channels or swales, and at selected points not more than one hundred (100) feet apart in all directions;

(5) *Monumentation*: The type and location of existing and required monuments (bounds) at the corners of lots and at points of curvature, tangency, and deflection points along the street rights-of-way.

(6) *Natural Features*: The location of all significant natural features including, but not limited to, ledge outcroppings, streams and water bodies, wetlands, bluffs and ravines, and steep slopes in excess of fifteen percent (15%) and twenty-five (25%);

(7) *Zoning*: Zoning District Boundary Lines including Overlay Districts with labels;

(8) *Setbacks:* Setbacks shall be shown and dimensioned including those required for yards, the Shoreland Protection District, as well as Bluff and Wetland buffers and setbacks;

(9) *Streets and Right-of-Way:* The location and the right-of-way and traveled way widths of all existing and proposed streets, alleys, and other public ways;

(10) *Access and Driveways*: All existing and proposed driveways along the subdivision frontage, on abutting properties, and on the opposite sides of the street;

(11) *Easements*: The location, width, and purpose of existing and proposed easements for road rights-of-ways, utilities, drainage, slope, open space or conservation easements, and any other easement as required. The easements to be shown include both public and private easements. The dimensions and bearings shall be shown for the boundaries of all easement areas;

(12) *Site Improvements*: The location of existing improvements on the site and on abutting properties including, but not limited to, driveways, parking, buildings and structures, railroads, parks, and other pertinent features as determined by the Clerk of the Board;

(13) *Municipal Sewer*: The location, size, and invert elevations of existing and proposed sanitary and storm sewers including manholes, catch basins, and culverts;

(14) *Septic Systems*: Where municipal sewer service is not available, soil data and test results sufficient to submit an application for subdivision approval to the NHDES including a plan showing the location of test pits, the soil profiles, ground water elevation, and seasonal high water table elevation at each test pit. The required 4,000 square foot septic

drain field area required by the NHDES shall be shown on the subdivision plat;

(15) *Municipal Water Supply*: The location and size of all existing and proposed water mains, including hydrants, gates, valves, and blowoffs;

(16) *Wells*: Where municipal water supply is not available, the location of all existing and proposed wells and required wellhead protection radii on the site and abutting properties;

(17) *Recreational Use*: The location, bearings and dimensions, and area of all property proposed to be set aside for park or playground use or other public or private reservation, with designation of the purpose thereof, and conditions, if any, of the dedication or reservation;

(18) *Other Utilities*: The location and size of all existing and proposed underground and overhead non-municipal utilities;

(19) *Conditions of Approval*: Pursuant to RSA 676:3 III, prior to the plat being recorded, those conditions of approval as set forth by the Planning Board which remain to be fulfilled after the recording of the plat shall be noted on the plat;

(20) *Cluster and Open Space Subdivisions*: The required open space calculations shall be noted on the plan, and the protected open space areas shall be shown on the plan, with metes and bound descriptions, bounds provided, and the size of each area noted; and

(21) *Phasing Boundaries*: Phase boundaries shall be shown and phases labeled on the subdivision plat.

16.04 ***Construction Plans***: Eight (8) sets of construction plans shall be required for a major subdivision. The following information is required to be shown at a minimum:

(1) *Standards*: The following standards shall be used to prepare all construction plans:

(a) Existing topographic conditions and all proposed changes in ground elevation with a contour interval of two (2) feet, as referred to the sea-level datum of the North American Vertical Datum 1988 (NAVD88);

(b) Where the land slopes less than two percent (2%), spot elevations shall be shown at all breaks in grade, along all drainage channels or swales, and at selected points not more than a hundred (100) feet apart in all directions;

(c) Detail sheets shall be provided for all facilities to be constructed, as set forth in the City of Concord Construction Standards and applicable State of NH standards or as may be deemed necessary by the Clerk and the City Engineer;

(d) The name, address, signature, and seal of the NH Licensed Professional Engineer who prepared the plans. Landscape plans shall bear the signature and seal of the NH Licensed Landscape Architect who prepared the plans; and

(e) Phase boundaries shall be shown on all construction drawings, except easement plans. Each phase shall be designed to be self-supporting, including provisions for temporary turnarounds and with utilities extended to the phase boundary and terminated appropriately.

(2) *Roadway Plan*: Plans and profiles shall be shown for all proposed streets and roads and for those existing streets and roads adjacent to the subdivision that are required to be improved.

(a) Plans shall indicate right-of-way widths and traveled way widths, the location and widths of sidewalks, tipdowns, curbs, street trees, street lights, and street signs, pavement markings, all radii of curves, lengths of tangents and central angles, and centerline stationing;

(b) Profiles shall show existing and proposed elevations along the center lines of all roads and side slopes;

(c) A typical cross-section shall be provided for each classification of street proposed to be included in the subdivision. The typical cross-section shall indicate the location and width of pavement, curbs, sidewalks, right-of-way limits, and the locations of street trees, fire hydrants, underground utilities, width and depths of select materials, street lighting standards, and street signs. The

typical locations of subsurface and, where appropriate, overhead utilities shall be shown; and

(d) Roadway cross-sections shall be furnished for each one hundred (100) foot station, at the centerline of streams and major culverts or structures and, if the terrain is steep, hilly or uneven, they shall be furnished for each fifty (50) foot station and at any unusual or abrupt changes in existing ground. Sections may be drawn at a scale of one (1) inch equal to ten (10) feet, but a scale of one (1) inch equal to five (5) feet is preferred. The Clerk of the Planning Board and City Engineer may require additional cross-sections at specific locations where deemed necessary to evaluate the relationship of the street to adjacent property.

(3) *Grading and Drainage Plan*: At the same scale as the final plat, the following information shall be shown on a plan and information shall be submitted indicating the proposed method of collecting and disposing of storm water runoff resulting from the development of the site.

(a) All swales, drainage ditches, culverts, drain pipes, inlet and outlet structures, catch basins and manholes, storm water treatment structures, easements, and detention and retention ponds shall be shown, including such elevations and cross-sections as may be necessary to determine the suitability and adequacy of the proposed system;

(b) Ten (10) and twenty-five (25) year storm runoff estimates, including all calculations, shall be submitted providing an analysis of the subdivision as projected in its fully developed state; and

(c) The drainage plan may be incorporated with the roadway plan where the Clerk of the Planning Board and the City Engineer determine that the drainage information can clearly be shown without obscuring other plan information.

(4) *Utility Plan*: At the same scale as the final plat, the following information shall be shown:

(a) A plan showing the location, size, and invert elevations of existing and proposed sanitary and storm sewers, including

manholes, catch basins, and culverts; the location and size of all existing and proposed water mains, including hydrants, gates, valves, and blowoffs; and the location of any pump stations, lift stations, and other appurtenant facilities or structures shall be shown;

(b) Profiles of all municipal utilities; and

(c) The utility plan may be incorporated with the roadway plan, where the Clerk of the Planning Board and the City Engineer determine that the utility information can clearly be shown without obscuring other plan information.

(5) *Erosion Control*: At the same scale as the final plat, an erosion control and planting plan shall be provided showing methods to control erosion and storm water runoff during construction and permanent methods to revegetate all disturbed areas.

(6) *Non-Municipal Utilities*: A plan showing the location and size of underground or overhead non-municipal utilities including, but not limited to, gas lines, electric transmission lines, telephone transmission lines, cable television, steam distribution mains, and fire and police alarm transmission lines. The location of all manholes, transformers, poles, and other appurtenant facilities or structures shall be shown. This information may be displayed on the utility or roadway plan, where the Clerk of the Planning Board and the City Engineer determine that the non-municipal utility information can clearly be shown without obscuring other plan information.

(7) *Landscape Plan:* A landscape plan prepared, signed, and stamped by a NH Licensed Landscape Architect shall be provided showing the location of existing and proposed street trees, clearing limits, and all required and proposed plantings. This information may be displayed on the roadway plan where the Clerk of the Planning Board and the City Engineer determine that the landscape information can clearly be shown without obscuring other plan information.

(8) *Construction Detail Sheets:* Construction detail sheets shall be provided for all public and private improvements, as set forth in the City of Concord Construction Standards and Details.

(9) *Other Improvements:* Plans drawn to scale for other improvements shall be required, where applicable, showing the location, type, materials, and dimensions of such improvements as fences, outdoor recreational facilities, common mail box locations and parking, street furniture, off road trails, paths and sidewalks, fences, retaining walls, docks, etc. This information may be displayed on the roadway plan where the Clerk and the City Engineer determine this information can clearly be shown without obscuring other plan information.

SECTION 17 SPECIAL PROVISIONS FOR CONDOMINIUM SUBDIVISIONS

17.01 ***Special Provisions for Condominium Subdivisions***: Condominium applications shall be classified as a major or minor subdivision with regards to the application process and submission requirements, as set forth is Section 6.02, Classifications of Subdivisions herein. Condominium applications shall be prepared and submitted in compliance with NH RSA 356-B, Condominium Act. In addition to the requirements for a minor or major subdivision plat, the following additional elements pertain specifically to Condominium subdivisions.

(1) Site Plan;
(2) Floor Plans;
(3) Common Facilities; and
(4) Condominium Declaration and By-Laws.

17.02 ***Site Plan:*** A condominium site plan shall be prepared by a NH Registered Land Surveyor. The contents of the site plan shall include the requirements of the minor or major subdivision submittal requirements, as well as the contents specified in NH RSA 356-B:20. The bearings and dimensions for all condominium land units shall be provided on the condominium site plan, along with necessary ties to property corners.

17.03 ***Building Floor Plans***: Floor plans of condominium building units shall be provided at a scale of 1″= 5′, 1″= 10′ or 1″= 20′ showing the location and horizontal and vertical dimensions of each unit and common area.

(1) The floor plans shall be prepared, signed, and stamped by a NH Licensed Land Surveyor, a NH Licensed Architect, or a NH Licensed Professional Engineer in a format suitable for filing in the Merrimack County Registry of Deeds.

(2) The floor plans shall include a standard Planning Board approval block.

(3) The exterior walls of each unit shall be shown and provisions for ingress to and egress from each unit to common areas shall be shown.

17.04 ***Common Facilities***: All common and limited common areas and their dimensions shall be shown on the final plat and building floor plans. The following information shall be included on the final plat and building plans:

(1) The location of all common facilities on the site shall be shown on the final plat, including all parking, driveways, landscaped areas, walkways, signs, solid waste facilities, fire hydrants, mail boxes, light poles, above ground utilities, fences, and other pertinent common facilities;

(2) The location, dimension and purpose of each common area, and limited common area shall be shown;

(3) Acceptable means for water metering, water service, and sewer service including existing and proposed water and sewer service connections; and

(4) If the existing water and sewer services are substandard, the Planning Board may require the services to be upgraded to City standards.

17.05 ***Acceptable Water Metering and Water Service***: The conversion of existing buildings to condominium creates unique arrangements for utility service. The proposed condominium shall demonstrate one or more of the following provisions for water metering and water service:

(1) Install separate water services and water meters for each condominium unit;

(2) Install separate water service valves at the street line and individual meters in the condominium units;

(3) Use single meter for each building with the condominium association assuming responsibility for the water billing; and

(4) Install multiple water meters on a single water service where the service enters the building. The water meters and water service valves must be located in an accessible location, where water utility service

personnel can enter without passing through individual condominium units.

17.06 ***Condominium Declaration and By-Laws***: Two (2) copies of all condominium documents, including the declaration of condominium and by-laws shall be provided for review and approval as to form and content by the City Solicitor and the Clerk of the Board. The approved condominium documents shall be considered part of the official approval and shall not be altered to be inconsistent with the recorded plat, without further review and approval by the Board of a revised subdivision application.

SECTION 18 Special Provisions for Comprehensive Development Plans

18.01 ***Establishment***: Pursuant to Article 28-9-4 (e) of the City of Concord Zoning Ordinance, a CDP is required for any property where a subdivision is proposed within a Performance District as established within said Zoning Ordinance. The CDP must be approved by the Planning Board prior to granting of subdivision or site plan approvals for the property.

18.02 ***Application Procedure:*** An application for CDP shall conform to the procedures set forth in Section 8, Design Review Phase, except that approval is granted by the Planning Board and the applicant is bound by all statements and submissions made as part of the application.

18.03 ***Submittal Requirements*****:** The following information is required at a minimum for each CDP application:

(1) All items set forth in Section 12, General Requirements for All Drawings and Section 13.01, All Applications. In Section 13.01 (8), the Impact Studies which shall be required are those that, as determined by the Clerk of the Board, will generate new information which will assist the Board in consideration of the application;

(2) *Project Statement*: A statement describing the proposed phasing of the subdivision including the time frame, percentage of total residential and non-residential uses, and the improvements and facilities, included in each stage;

(3) *Site Analysis*: Site analysis shall contain all of the following information:

(a) *Natural Features*: The following information both on and adjacent to the site to be subdivided:

i. Identification of wetlands and wetland buffers;
ii. Vegetation survey showing fields, swamplands, wetlands, grasses, shrubs, and trees (deciduous and evergreen);
iii. Rock outcrops, ledges, surface water, streams, seasonal or permanent water bodies or water courses, including any known flood elevations as well as identification of high water marks;
iv. Important views of and from the site;
v. Orientation to the sun, and direction of prevailing winds;
vi. Contour lines at a minimum of two (2) foot intervals and (10) foot contour intervals;
vii. Slopes in excess of fifteen percent (15%) and in excess of twenty-five percent (25%);
viii. Identification of bluffs and buffers to bluffs;
ix. Identification and classification of the extent and types of soils using the USDA Soil Conservation Service System;
x. Wellhead protection areas;
xi. Wetland buffers; and
xii. Shoreland Protection Overlay District boundaries and natural vegetative and woodland buffers.

(b) *Man-made Features*: The following items, both on and adjacent to the site to be subdivided, are required to be shown at minimum, but are not exclusive:

i. Location of utilities, including any specific rights-of-way and approximate size of sanitary sewers, water mains, storm sewers, including surface and subsurface drainage systems, and non-municipal utilities including overhead transmission lines;
ii. Identification of municipal special district boundaries;
iii. Location and purpose or use of buildings and structures;
iv. Location of walls, fences, and wells;
v. Public streets and highways and mapped future streets as defined on the Official Map;
vi. Railroad tracks and rights-of-way and airport approach zones;
vii. Driveways, curb cuts, and parking lots;

viii. Any historic structures or sites listed or eligible for the National or State Registers of Historic Places and any historic markers;

ix. Any cemeteries, stone walls or foundations, or known archeological sites; and

x. Public and private recreation areas, parks and open space.

(c) Proposed highways or other major public improvements planned by public authorities for future construction on, or in proximity, to the site;

(d) Planned private improvements on, or in proximity to, the site including any previously approved subdivision;

(e) Any other significant man-made or natural features which have relevance to development of the site; and

(f) Photographs of site showing existing features and conditions. Notes shall be made of camera locations, direction, view, and key numbers.

(4) *Proposed Site Layout*: A proposed site layout shall show:

(a) The approximate location, width, and lengths of proposed streets;

(b) The approximate location and distribution of proposed lots, buildings, and structures;

(c) Tabulations of the gross land area, buildable land area, number of lots, range of lot sizes, required open space, number of dwelling units, residential density, approximate square footage of non-residential uses, and approximate lot coverage of buildings and impervious surfaces;

(d) The approximate location and area of all parcels of open space land proposed to be set aside for park or playground use or other public use or for the use of property owners in the proposed subdivision; and

(e) Any proposed impacts to wetlands and bluffs and buffers to bluffs and wetlands.

(7) *Site Utility Layout*: A site utility layout shall show the following:

(a) The location of existing sanitary sewers and or on-site septic systems, water mains and/or potable wells, and existing utility poles;

(b) Existing utility rights-of-way;

(c) Existing drainage facilities and the approximate layout of all proposed storm drainage facilities, including detention and retention ponds and drainage swales;

(d) Preliminary proposals for connection with existing water supply and sanitary sewage systems or alternative means of providing water supply and sanitary waste treatment and disposal; and

(e) Existing non-municipal utilities on or adjacent to the site and the approximate layout of non-municipal utilities proposed.

(8) *Management*: A description of the proposed ownership and management organization or association shall be provided, indicating the structure, powers and duties of such organization, and its responsibilities for the maintenance of common facilities.

(9) *Additional Information*: The Planning Board may require additional information in support of the application prior to rendering a decision on the CDP.

***18.04 Phasing*:** For those applications where phasing is proposed, the CDP need not contain as detailed a layout of proposed buildings, driveways and parking, utilities, and drainage facilities for later phases than is required for the first phase. Later phases may consist of a plan showing the location, land area, use, and proposed square footage by type of use. The plans submitted for future phases shall indicate a proposed location for common facilities and for access and utility services. The plan shall demonstrate that future phases can be provided with appropriate access, parking, utility services, and drainage facilities.

***18.05 Standards for Review*:** The Planning Board shall utilize the following standards in its review and consideration of an application for a CDP.

(1) *Zoning*: The application shall conform to the provisions of the Zoning Ordinance including, but not limited to, Performance District standards, permitted uses, minimum setbacks, maximum lot coverage, requirements for buffers, access, parking, and loading requirements, and Supplemental Standards as may be applicable to the uses proposed;

(2) *Subdivision Regulations*: The application shall conform to the requirements and standards contained within these regulations and, where applicable, those requirements and standards established within the City of Concord Site Plan Review Regulations;

(3) *Facilities*: The Board shall determine that adequate provisions have been made for the following common facilities for each of the phases, proposed lots, leasehold, units, or other sub-area:

(a) Access and circulation;
(b) Parking and loading facilities;
(c) Public and private utility services; and
(d) Drainage facilities.

(4) *Easements and Covenants*: The Board shall determine if adequate legal documents in the form of easements and/or condominium documents have been provided, which ensure in perpetuity that common facilities, access, utilities, drainage, parking, and loading spaces are available to support the proposed uses proposed within each phase of the CDP.

18.06 Issuance of a Decision: Pursuant to Article 28-9-4 (e) (5) of the City of Concord Zoning Ordinance, the Planning Board shall approve, approve with conditions, or disapprove an application for a CDP. Within 72 hours after a vote on a CDP, the Clerk of the Board shall issue a written record of the decision. All subsequent subdivision and site plan approvals shall be in accordance with the approved CDP.

18.07 Resubdivsion: For a resubdivsion of property within a Performance Zoning District, where no new lots are proposed and no common facilities are proposed, a combined minor subdivision application and CDP can be submitted. The Clerk of the Board can reduce the scope of the application requirements for a CDP to reflect the extent of the proposed improvements planned on the affected lots, subject to concurrence by the Planning Board.

18.08 **A*mendments:*** The application and review process for amendments to a CDP shall adhere to the same process and requirements, as set forth herein for a new application.

Subdivision Regulations

Chapter 4
Design Standards

SECTION 19 General Design Standards

SECTION 20 Street Layout and Access Standards

SECTION 21 Design Standards for Streets

SECTION 22 Sidewalks, Multi-use Paths, and Trails

SECTION 23 Storm water Management

SECTION 24 Water Supply

SECTION 25 Sanitary Sewage Disposal

SECTION 26 Non-Municipal Utilities

SECTION 27 Parks, Open Space, and Sites for Other Public Uses

SECTION 28 Landscaping and Erosion Control

SECTION 29 Fire Protection

SECTION 19 General Design Standards

19.01 Conformance to Applicable Laws, Rules, and Regulations: In addition to the requirements established herein, all subdivision applications shall comply with the following laws, rules, regulations, and adopted plans:

(1) All applicable State statutes and Federal law and all rules and regulations promulgated in accordance with such statutes and laws;

(2) The Zoning and health Ordinances, Building and Housing Codes, and all other applicable ordinances and regulations of the City of Concord; and

(3) The Master Plan, Official Map, and CIP of the City.

19.02 Self-Imposed Restrictions: If the owner either voluntarily before the Planning Board or as a condition of approval, places restrictions on any of the land contained in the development greater than those required by the Zoning Ordinance or by these regulations, such restriction shall be noted or otherwise described on the plat to be recorded and shall be formally established by one or both of the following:

(1) Easements to be conveyed to the City, or to other responsible parties as may be required by the Planning Board, shall be recorded with the plat at the Merrimack County Registry of Deeds in form to be approved by the City Solicitor, Clerk of the Planning Board, and the City Engineer, and,

(2) A formal written agreement between the City and the applicant, binding the applicant and successors in title to said restrictions, to be recorded at the Merrimack County Registry of Deeds in a form to be approved by the Clerk of the Planning Board, and the City Solicitor.

19.03 Specification References:

(1) Reference to City standards shall mean the City of Concord Constructions Standards and Details, as most recently published.

(2) Reference to State specifications shall mean Standard Specifications for Road and Bridge Construction of the NHDOT, as most recently promulgated.

(3) Reference to MUTCD shall mean the Manual on Uniform Traffic Control Devices for Streets and Highways, published by the U.S. Department of Transportation, Federal Highway Administration, as most recently published.

(4) Reference to the construction standards and specifications of the NHDES shall mean the Construction Standards for Sanitary Sewer and Water Supply Systems of the NHDES, as most recently adopted.

(5) Reference to the Architectural Barrier Free Code shall mean the Accessible and Useable Building and Facilities Code of the International Code Council, as most recently adopted by the City.

(6) Reference to the Alterations of Terrain standards shall mean the NHDES Alteration of Terrain (AOT) (Chapter Env-Wq 1500).

(7) Reference to standards for Sewer Discharge Permits shall mean the NHDES Standards of Design and Construction for Sewerage and Wastewater Treatment Facilities (Chapter Env-Wq 700)

(8) Reference to standards for Septic Systems shall mean the NHDES Subdivision and Individual Sewage Disposal System Design rules (Chapter Env-Wq 1000).

(9) Reference to standards for potable wells shall mean NH Water Well Board Standards for the Construction, Maintenance and Abandonment of Wells (Chapter Env-Wq 600).

19.04 Monuments: A NH Licensed Land Surveyor shall place permanent reference monuments in the subdivision, as required herein and as approved by the City Engineer. All monuments shall be inspected by the City of Concord. All such monuments shall be set flush with the proposed grade and planted in such a manner that they will not be removed by frost. All monuments shall be properly set prior to the time of the release of the performance guarantee.

(1) *Street Right-of-Way Monuments*: Monuments for street line bounds shall be located at all block corners, at the beginning and end of curves in streets, street intersections, and at intermediate points as shall be required by the City Engineer. Monuments shall be placed on both sides of the street and shall be spaced so as to be within sight of each other; the sight lines being contained wholly within the street limits. Monuments shall be of granite or reinforced concrete with a minimum

size of four (4) inches square by thirty six (36) inches long and be set as called for in the City of Concord Construction Standards, five-eights (5/8) of an inch to one inch (1) above ground in residential areas, four (4) to six (6) inches above ground in wooded areas, and slightly below grade when set in pavement. Monuments to be set in driveways may be modified as deemed appropriate by the City Engineer.

(2) *Lot Monuments*: Monuments for the external boundaries of the tract that is being subdivided and the lots that are being created shall be placed not more than one thousand (1,000) feet apart in any straight line and at all corners, at each end of all curves, at the point where a curve changes its radius, at all angle points in any line, and at all angle points along a meander line. Points along a meander line shall not be less than twenty (20) feet back from the bank of any river or stream, except that when such corners or points fall within a street, or proposed future street; the monuments shall be placed in the side line of the street. Lot bounds shall be of granite or reinforced concrete, not less than thirty (30) inches in length, not less than four (4) inches square and marked on top with a cross, brass plug, iron rod, or other durable material securely embedded, or by iron rods or pipes at least thirty (30) inches long and a minimum of one-half (1/2) inch diameter.

(3) *Boundaries and Blazing of Conservation Easements*: Monuments for the boundaries of conservation easements shall be provided in the same manner as lot monuments. The border of conservation easements shall be blazed with paint and/or signed in a manner approved by the Clerk upon recommendation of the Conservation Commission.

(4) *Monuments not Required*: The Board may, on the recommendation of the City Engineer, not require monuments at all courses along a meander line or on rear and side lot lines where lots exceed 10 acres.

19.05 ***General Design Standards for Lots***: The lot size, width, depth, shape and orientation, and the minimum building setback lines shall be appropriate for the location of the subdivision and for the type of development and use contemplated. The lot arrangement shall be such that there will be no foreseeable difficulties, for reasons of topography or other conditions, in securing building permits to build on all lots in compliance with the Zoning Ordinance and in providing driveway access to buildings on such lots from an accepted City Street.

(1) *Zoning Compliance*: Lot dimensions shall comply with the minimum standards of the Zoning Ordinance. Where lots are more than double the minimum required area for the zoning district, the Board may require that such lots be arranged so as to allow further subdivision and the opening of future streets where they would be necessary to serve such potential lots, all in compliance with the Zoning Ordinance and these regulations.

(2) *Lots Suitable for Proposed Use*: Each lot intended for development purposes shall be capable of supporting the type of use and development contemplated.

(3) *Buildable Lot Area*: A minimum buildable lot area shall be provided for each new lot, as set forth in the City of Concord Zoning Ordinance.

(4) *Useable Lot Area Rectangle*: Each lot intended for development purposes shall contain within the lot a minimum contiguous area of useable land. The minimum contiguous area of useable land shall be the result of multiplying the minimum lot size by the maximum lot coverage in percent, or 10,000 square feet, which ever is less. The minimum lot size and maximum lot coverage as a percent is defined in Article 28-4-1(h), Table of Dimensional Regulations in the City of Concord Zoning Ordinance. The minimum contiguous area of useable land shall be rectangular in shape, with no horizontal dimension which is less than sixty (60) feet.

(5) *Side Lot Lines at Street*: Side lot lines shall be at right angles to street right-of-way or radial to curving rights-of-way, unless a variation from this rule will give a better street or lot plan.

(6) *Corner Lots*: Dimensions of corner lots shall be large enough to allow for erection of buildings, observing the minimum front-yard setback from all abutting streets.

(7) *Non-residential Lots*: The depth and width of lots reserved or laid out for business, commercial, or industrial purposes shall be adequate to provide for the off-street parking and loading facilities required for the type of use and development contemplated, as established in the Zoning Ordinance.

(8) *Double Frontage and Reversed Frontage*: Double frontage and reversed frontage lots shall be avoided except where necessary to provide

separation of residential development from arterial and collector roads or to overcome specific disadvantages of topography and orientation. An easement, across which there shall be no right of access, shall be provided along the lot lines abutting said arterial or collector roadway or other disadvantageous use.

(9) *Conservation Lots*: Where lots are proposed to be permanently protected as conservation or open space, exclusive of public parks and recreation areas, and conveyed to the City, the State of NH, the Federal government, or a private conservation agency, the requirements for demonstrating buildable area and useable lot area do not apply. However, buildable lot area must be shown if the buildable lot area needs to be used to establish residential density as part of a cluster subdivision or to meet the buildable open space requirements of a cluster subdivision.

(10) *Frontage*: Each lot shall have frontage on a public street with a safe and independent access to a public street unless otherwise specified herein. The Board may permit or require shared or common access from a public street for two or more lots.

(11) *Access for Single Family or Duplex Lots:* Residential single family or duplex lots shall not, in general, derive access from an arterial or collector street. Where driveway access from an arterial or collector street may be necessary for several adjoining lots, the Board may require that such lots be served by a combined access drive, in order to limit possible traffic hazards on such street. Driveways shall be designed and arranged so vehicles shall not be required to back into traffic onto an arterial or collector street.

(12) *Water Bodies*: If a tract being subdivided contains a water body, or portion thereof, lot lines shall not divide such a water body.

(13) *Municipal Boundaries*: Whenever access to the subdivision is required across land in another municipality, access must be legally established and the access road must be adequately improved or a financial guarantee provided sufficient in amount to assure the construction of the access road. In general, lot lines should be laid out so as not to cross municipal boundary lines.

(14) *On-site Septic Disposal*: Where municipal sanitary sewer service is not available, the applicant shall demonstrate that each lot can be served by

an individual waste disposal system, which complies with the construction standards and specifications of the NHDES. The required 4,000 square foot septic drain field area required by the NHDES shall be shown on the subdivision plat along, with test pit locations and corresponding test pit logs.

(15) *On-site Water Supply*: Where municipal water supply is not available, the applicant shall demonstrate that each lot can be served by a private well, which complies with the current construction standards and specifications of the NH Water Well Board. Wellhead protection radii and separation from wetlands and waste disposal facilities shall be shown on the plans.

SECTION 20 STREET LAYOUT AND ACCESS STANDARDS

20.01 ***General Requirements:*** All subdivision lots shall provide safe and suitable access to an existing public street or shall make provision for the construction and dedication of a public street, in order to obtain safe and suitable access to each of the proposed lots within the subdivision.

20.02 ***Construction and Design Standards:*** All new streets and extensions of streets shall be constructed to the standards set forth herein appropriate for the land uses proposed, anticipated traffic volumes, and the functional classification of the streets as determined by the Board. The Board shall have the authority to require streets and roads to be constructed to a higher standard if, after consultation with the City Engineer, based on finding that the volume or characteristics of vehicles which may use the proposed street(s) will warrant the higher construction standard.

20.03 ***Substandard Existing Streets:*** Where an adjacent existing street from which access is gained is deemed to be substandard either in right-of-way or in facilities, the upgrading of said street shall be undertaken and the necessary right-of-way dedicated. Said streets shall either be reconstructed to the standards set forth herein, or to a lesser standard approved by the Board, after review and comment by the City Engineer and a determination that the proposed street is suitable for the existing and anticipated traffic which will utilize the street.

20.04 ***Future Streets*****:** Where the Master Plan, the Official Map or the adopted CIP indicates plans for realignment or widening of a road that would require use

of some of the land in the subdivision, the applicant shall be required to dedicate such areas for widening or realignment of such roads.

20.05 ***Traffic Impacts***: Where traffic from a proposed subdivision will adversely impact an adjacent street or intersection or intersections or road segments along a collector or arterial street, improvements to the said streets and intersections shall be required. The Board may require improvements to address highway, bicycle, and pedestrian traffic safety issues on streets and roads where traffic will access the development and may require traffic calming improvements to mitigate the impact of new development on local residential streets. The Board, after review and comment by the City Engineer, shall specify the extent of the improvements required to mitigate the traffic and safety impacts of the increased traffic.

20.06 ***Appropriate Design***: Proposed streets shall be of suitable location, width, grade, and alignment and constructed in a manner to accommodate the prospective type and volume of traffic; shall afford satisfactory access to police, firefighting, and other emergency response equipment; and shall be designed to accommodate snow removal, sanitation, and road-maintenance equipment. All streets shall be properly related to the pattern of existing and proposed land uses.

20.07 ***Master Plan***: The arrangement and character of all streets in a subdivision shall conform to the Master Plan and Official Map. The proposed streets shall compose a safe and convenient system in relation to other existing and planned streets, to topographical conditions, and to the proposed uses of land to be served by said street.

20.08 ***Access***: No subdivision shall be approved unless each lot has access from an existing or proposed public street, except as provided in a CDP, as set forth in Section 18 herein. Safe and sufficient vehicular access shall be provided from the abutting private or public street to the building site(s).

20.09 ***Residential Single Family Driveways:*** Each lot designed for single family residential or duplex use shall have safe, independent, and direct access from a public street or, upon approval by the Board, access may be shared by two or more lots or duplex units. The driveways serving one single family residence or duplex shall conform to the following standards:

(1) Have a slope no greater than ten (10) percent;

(2) Have a landing area at the intersection of the private drive and the public or private abutting street with a minimum length of twenty (20) feet and a slope not exceeding two (2) percent;

(3) Drives shall be a minimum of ten (10) feet wide and a maximum of twenty four (24) feet in width, exclusive of any on site parking or turnarounds;

(4) Circular drives may be allowed, but neither driveway opening shall be less than ten (10) feet wide and exceed fourteen (14) feet in width.

(5) Drives shall be separated a minimum of forty (40) feet from existing and proposed driveways and intersections, as measured from the pavement edge at the right-of-way line;

(6) No proposed residential driveway in a new subdivision designed to serve a single use on a residential lot shall exceed 1000 feet in length from the nearest public or common private drive. The maximum length of dead end common private drives and public streets is set forth in Section 20.12 herein; and

(7) Drives shall conform to sight distances set forth in the most recent edition of the AASHTO Highway Safety Design and Operations Guide.

20.10 ***Common Private Drives***: Where warranted, because of traffic or adverse topographic conditions or to minimize impacts to wetlands and bluffs, the Board may require that a driveway from a public street be shared by two or more lots. All portions of such a drive which are commonly shared shall be improved to facilitate two-way traffic flow. Rights of passage over and across such a driveway shall be established by easement for each of the lots so served. An agreement to convey a common driveway easement shall be recorded with the subdivision to insure that when the individual parcels are conveyed within the subdivision, the common maintenance and access provision shall be honored. Common private drives shall also conform to the applicable design standards, as set forth in Section 20, Street Layout and Access Standards, Section 21, Design Standards for Streets and Private Drives, and Section 22, Sidewalks, Multi-use Paths, and Trails.

20.11 ***Residential Common Private Drives***: Residential common private drives, where allowed in the Zoning Ordinance and the Subdivision and Site Plan Regulations, shall be constructed to the standards contained in Table 20-1, Standards for Residential Common Private Drives. Permanent provisions for maintenance acceptable to the Planning Board shall be established at the time of recording the subdivision plat. The equivalent rights-of-way are not to be encumbered by buildings or structures, except those normally and customarily included in public streets such as mail boxes, utility structures and street furniture. The equivalent rights-of-way are intended to be used as utility corridors to serve the residential structures. Residential common private drives shall also conform to the applicable design standards, as set forth in Section 20, Street Layout and Access Standards, Section 21, Design

Standards for Streets and Private Drives, and Section 22, Sidewalks, Multi-use Paths, and Trails.

20.12 ***Length of Residential Common Private Drives***: The length of a residential dead end common private drive shall not exceed 1,000 feet. The length of the dead end common drive shall be measured from the pavement edge of the nearest street with multiple accesses, to the end of the pavement at the end of the hammerhead turnaround, or the outside edge of pavement for cul-de-sacs. Where the public street that provides access to the common private drive is a cul-de-sac or dead end street, the length of the common drive plus the length along the cul-de-sac or dead end street shall not exceed 1,000 feet as measured from the edge of the traveled way of the public street that provides access to the cul-de-sac or dead end street.

20.13 ***Curbing for Residential Common Private Drives***: Curbing shall be provided on both sides of common private drives serving more than eight (8) units. The Planning Board may require curbing for developments containing three (3) to eight (8) units on both sides of common private drive, where slopes of six (6) percent or greater are proposed upon recommendation of the City Engineer. Curbing is not required for common driveways serving two (2) units unless the City Engineer identifies drainage issues which, in the City Engineer's opinion, would require the installation of curbing. Curbing on common residential private drives may consist of vertical granite, sloped granite, concrete, or asphaltic concrete material constructed and installed per the City of Concord Constructions Standards and Details. Where an asphalt sidewalk or walkway is generally parallel to and located within four (4) feet of a common private drive or other vehicular use or parking area, vertical granite or vertical concrete curbing shall be used exclusively.

20.14 ***Terminus of Residential Common Private Drives***: Dead end common private drives shall terminate in a turnaround based on the number of units served by the dead end common private drive.

(1) *Two (2) residential dwelling units:* A hammerhead turnaround in a T- or Y-shape is required at the end of the common drive where the driveways to the individual units diverge, as set forth in Section 21.12, Hammerhead or T-shaped Turnaround.

(2) *Three (3) to eight (8) residential units:* The common private drive may be terminated with either a T- shaped hammerhead or a cul-de-sac, as set forth in Section 21.11, Cul-de-sacs and Section 21.12, Hammerhead or T-shaped Turnaround.

(3) *Nine (9) or more residential dwelling units:* The common private drive shall terminate with a cul-de-sac, as set forth in Section 21.11, Cul-de-sacs.

20.15 ***Limited Access Residential Subdivision***: Where a single family or duplex residential subdivision borders on or contains an existing or proposed arterial or collector street, the Board may require that access to such streets be limited by one of the following means:

(1) Where property lines abut an arterial or collector street and frontage is available on an abutting local street, no access shall be provided from the lot onto the arterial or collector street. Screening may be required along the frontage of the arterial or collector street, as set forth in Article 28-4-2, Buffer Requirements for Residential District Boundaries of the City of Concord Zoning Ordinance or as otherwise determined necessary by the Planning Board.

(2) Access shall be provided from either a public local street or a private common drive when lot lines abut the arterial or collector street.

20.16 ***Limited Access Non-residential Subdivisions:*** Where a non-residential subdivision is proposed on an arterial or collector road or a subdivision for multi-family development is proposed on an arterial or collector road, shared common driveways or existing or new local streets shall be used to provide access to development lots. Where possible, all access to the lots shall be from the common driveways and local streets. Easements shall be conveyed to the City controlling the location and number of access points to the subdivision from the arterial or collector roadway. The local streets and common private drives within the subdivision shall be designed generally to intersect at right angles to the arterial and collector streets.

20.17 ***Commercial Driveways and Access:*** Minimum design and access standards for driveways shall be as set forth in Article 28-7-8, Access and Driveway Standards of the City of Concord Zoning Ordinance. The goal of access management along arterial and collector streets is to enhance bicycle and pedestrian safety, to preserve highway capacity, and to enhance traffic safety by reducing conflicting turning movements along these corridors by limiting points of access and providing for movement between properties along the corridor.

20.18 ***Interconnected Drives along Arterial Roadways***: Provisions shall be made for interconnected driveways for development and redevelopment along arterial and collector streets as part of an access management plan for these corridors. The Planning Board may require connection or establish easements to allow for future connections as each property redevelops or develops along these corridors.

20.19 ***Street Layout and Arrangement*****:** All streets shall be properly integrated with the existing and proposed street system as established on the Official Map and the Master Plan. The arrangement of streets shall provide for the continuation of streets between adjacent properties for the convenient movement of traffic, effective fire protection, efficient provision of utilities, and when such continuation is in accordance with the Official Map and the Master Plan.

20.20 ***Connectivity:*** All subdivisions should be designed to allow both pedestrian and vehicular connectivity between both existing and anticipated adjoining developments and neighborhoods. Roads connecting adjacent properties, developments, and neighborhoods shall be connected in a manner that allows access but does not promote cut-through traffic, speeding, or the diversion of traffic from nearby arterial and collector roads.

20.21 ***Procedure for Subdivision Where Further Subdivision Is Possible***: Whenever a parcel of land is subdivided and where there is the possibility that further subdivision may occur on the property or on the immediately adjacent properties, the Planning Board may require that rights-of-way for the future layout or extension of streets be shown on the plat and easements be recorded for the future streets.

20.22 ***Dead End Streets***: Where a street cannot be extended to the boundary of a subdivision because of topography or other physical condition or, in the opinion of the Board, such extension is not necessary or desirable for the coordination of the layout of the subdivision with the existing layout or the most advantageous future development of adjacent tracts, the Board may require the terminus of the street to be set back from the property line of an abutter to provide an adequate buffer to the adjacent property. The Board may require the reservation of an appropriate easement to the property boundary to accommodate drainage facilities, pedestrian traffic, or utilities.

Table 20-1
Standards for Residential Common Private Drives

	Two Dwelling Units	Three to Eight Dwelling Units	Greater than Eight Dwelling Units
Equivalent Right-of-Way Width	30 feet	50 feet	50 feet
Pavement Width	18 feet with a 1 foot gravel shoulder on each side	22 feet with a 2 foot gravel shoulder on each side	26 feet
<u>Slopes</u> Maximum Grade Minimum Grade Maximum Cul-de-sac Grade Maximum Grade at Intersection Cross Slopes Intersection Landing Area	 10% 1% 4% 2% first 20 feet -3% 2% first 20 feet	 8% 1% 4% 2% first 30 feet -3% 2% first 30 feet	 8% 1% 4% 2% first 60 feet -3% 2% first 60 feet
Design Speed	Not applicable	25 mph	25 mph
Sidewalks	None	One side*	One side*
Curbing	None**	None**	Both sides
On-street Parking	Not applicable	Yes	Yes
Terminus or Turnaround	T-shaped or Y-shaped	T-shaped or Cul-de-sac	Cul-de-sac

* The Planning Board may require the installation of a sidewalk if the Board believes that existing pedestrian use will be sufficient to warrant a sidewalk or an existing or future connection to the city sidewalk system is feasible.
** Curbing may be required pursuant to Section 20-13, Curbing for Common Residential Drives.

20.23 ***Temporary Dead End Streets***: If the adjacent property is undeveloped and the street(s) must temporarily be a dead end, the right-of-way shall be extended to the property line and the street(s) shall be constructed to the property line or the maximum allowable length of a dead end road or common private driveway or combination of both. A temporary T-shaped turnabout shall be provided on all temporary dead end streets, and the easements shall be designed to revert to the abutting lots once the roadway is extended.

20.24 ***Length of Dead End Streets***: Dead end streets shall be limited to a maximum length of 1,000 feet. Temporary dead ends shall also be limited to 1,000 feet until secondary access to a public street can be provided. The length of dead end streets shall be measured from the pavement edge of the nearest street with multiple accesses to the end of the pavement at the end of the hammerhead turnaround or the outside edge of pavement for cul-de-sacs. Right-of-way shall be conveyed to extend a dead end street within a development, where the Planning Board deems it advisable and feasible to interconnect existing and future neighborhoods and developments. The conveyance of the right-of-way to facilitate future private development is in no way intended to either indicate or establish a policy whereby the City will construct, develop, or otherwise improve the future street right-of-way.

20.25 ***Layout of Local or Minor Streets***: Local and minor streets shall be laid out to conform as much as possible to the topography, to discourage vehicular use by through traffic or speeding, to permit efficient drainage and utility systems, and to require the minimum number of streets necessary to provide convenient and safe access to property. The use of curvilinear streets, cul-de-sacs, or U-shaped streets shall be encouraged where such use will result in a more desirable layout. All streets shall be arranged so as to obtain the maximum number of building sites at or above the grades of the streets.

20.26 ***Intersections*****:** New intersections shall conform to the following standards:

(1) *Alignment:* Streets shall be laid out so as to intersect as nearly as possible at right angles. A proposed intersection of two (2) new streets at an angle of less than sixty-five (65) degrees shall not be acceptable. A street which is proposed to approach another street at an oblique angle shall be curved for at least one hundred (100) feet in order to create an intersection at approximately right angles.

(2) *Intersecting Streets*: Not more than two (2) streets shall intersect at any one point unless specifically approved by the Planning Board.

(3) *Intersection Spacing*: Streets shall either be aligned with those across the street or shall have a minimum offset of 250 feet, when intersecting a minor or local street. Street intersections on a major collector or arterial street shall have a minimum offset of 500 feet. Spacing between intersections on the same side of the street shall be a minimum of 250 feet on a minor or local street and 500 feet on an arterial or collector street.

(4) *Roundabouts*: An applicant may propose, or the Planning Board may require, the construction of a roundabout instead of a conventional intersection. The roundabout design shall conform to the standards set forth in Section 21.19, Roundabouts.

20.27 ***Reserve Strips***: The creation of reserve strips controlling access to streets shall be prohibited, except where required by the Board and where their control is explicitly placed with the City.

20.28 ***Boundary Streets***: Streets to be laid out along the boundary of a subdivision so that all or a portion of the width of the street is proposed to be located on adjoining property shall be prohibited, unless the full right-of-way is dedicated, and the proposed street is fully constructed as part of the subdivision.

20.29 ***Grades***: All streets shall be arranged so as to obtain the maximum number of building sites at or above the grades of the streets. Grades of streets shall conform as closely as possible to the original topography. A combination of steep grades and curves shall be avoided.

20.30 ***Blocks*****:** The lengths, widths, and shapes of blocks shall be determined with due regard to the provision of adequate building sites suitable to the special needs of the type of use contemplated: zoning requirements as to lot sizes and dimensions; the need for convenient access, circulation, control, and safety of street traffic; and the limitations and opportunities of topography.

(1) *Width:* Blocks shall have sufficient width to provide for two (2) tiers of lots of appropriate depths. Exceptions to this prescribed block width shall be permitted in blocks adjacent to collector or arterial streets, railroads, or waterways. In long blocks, the Board may require the reservation of easements through the block to accommodate utilities, drainage facilities, or bicycle and pedestrian traffic.

(2) *Length*: Block lengths shall not exceed one-thousand two-hundred (1,200) feet nor be less than five hundred (500) feet in length with the exception of subdivisions within the Open Space Residential (RO) Zoning District. Block lengths in excess of 1,200 feet may be approved by the Planning Board in order to provide for secondary access to developments.

20.31 ***Street Names and Addresses***: All street names shall be approved by the Planning Board, upon recommendation of the City Engineer, and shall be shown on the plans. Duplicate and similar sounding street names are prohibited due to Enhanced 911 requirements. A street which is, or is planned as, a continuation of an existing street shall bear the same name. New streets aligned opposite of an existing street shall bear the existing street name where practical. Private street names shall be similarly approved by the Planning Board, subject to the provisions of Article 5-1-1.2 of the City of Concord Code of Ordinances. All addresses for each lot on a public or private street shall be approved by the City Engineer and shall be shown on the plans.

20.32 ***Parking***: Where the provision of on-site parking, loading, lighting, and landscaping is required as part of a Condominium Subdivision or a Comprehensive Development Plan, the standards to be used shall be those contained in the City of Concord Site Plan Review Regulations and in Article 28-7, Access, Circulation Parking and Loading of the City of Concord Zoning Ordinance.

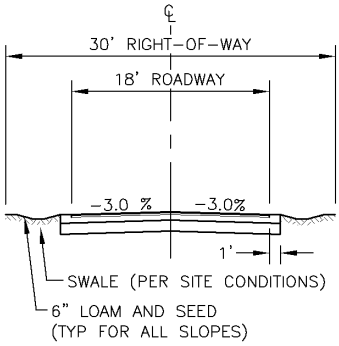

PRIVATE COMMON DRIVE TWO DWELLING UNITS

ROADWAY MATERIALS
3" HOT BITUMINOUS PAVEMENT
1½" WEARING COURSE
1½" BASE COURSE
6" CRUSHED GRAVEL
12" GRAVEL

- THIS DETAIL IS NOT INTENDED TO SHOW THE FINAL CONFIGURATION OF THE STREET OR DRIVE AND IS MEANT ONLY TO SHOW TYPICALS THAT MAY APPLY

Figure 20 - 1

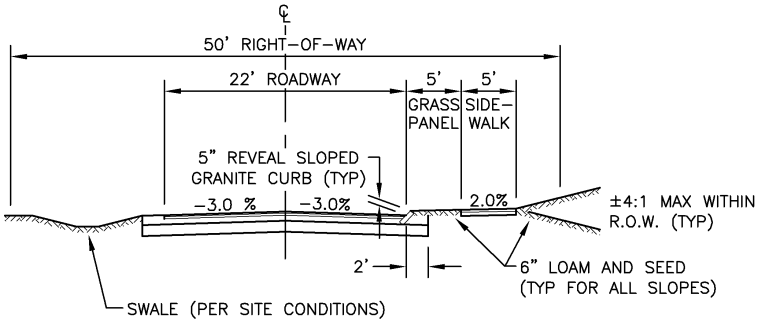

PRIVATE COMMON DRIVE THREE TO EIGHT DWELLING UNITS

ROADWAY MATERIALS
4" HOT BITUMINOUS PAVEMENT
1½" WEARING COURSE
2½" BASE COURSE
6" CRUSHED GRAVEL
12" GRAVEL

SIDEWALK MATERIALS
3" HOT BITUMINOUS PAVEMENT
1½" WEARING COURSE
1½" BASE COURSE
4" CRUSHED GRAVEL
(6" CRUSHED GRAVEL IN AREAS WITH POOR DRAINING SOIL)

- SEE SECTION 20-13 FOR CURB REQUIREMENTS
- THIS DETAIL IS NOT INTENDED TO SHOW THE FINAL CONFIGURATION OF THE STREET OR DRIVE AND IS MEANT ONLY TO SHOW TYPICALS THAT MAY APPLY

Figure 20 - 2

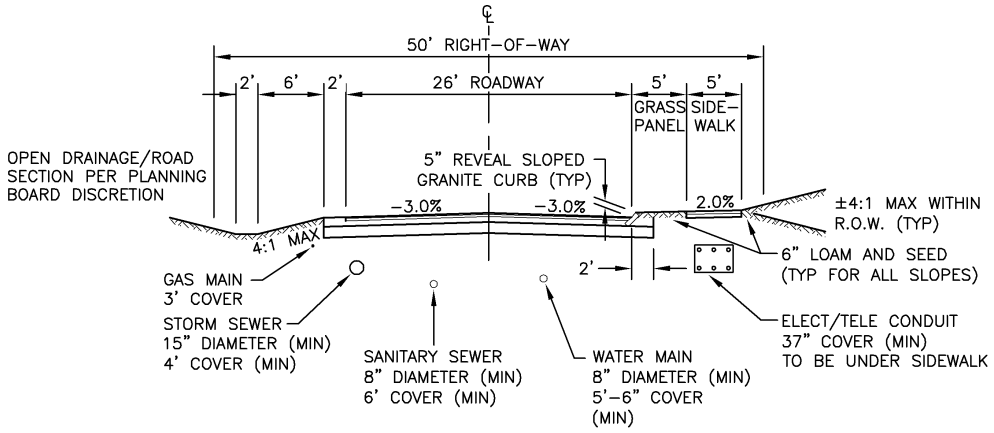

PRIVATE COMMON DRIVE
GREATER THAN EIGHT DWELLING UNITS

ROADWAY MATERIALS
4" HOT BITUMINOUS PAVEMENT
1½" WEARING COURSE
2½" BASE COURSE
6" CRUSHED GRAVEL
12" GRAVEL

SIDEWALK MATERIALS
3" HOT BITUMINOUS PAVEMENT
1½" WEARING COURSE
1½" BASE COURSE
4" CRUSHED GRAVEL
(6" CRUSHED GRAVEL IN AREAS WITH POOR DRAINING SOIL)

- SEE SECTION 20–13 FOR CURB REQUIREMENTS
- THIS DETAIL IS NOT INTENDED TO SHOW THE FINAL CONFIGURATION OF THE STREET OR DRIVE AND IS MEANT ONLY TO SHOW TYPICALS THAT MAY APPLY

Figure 20 - 3

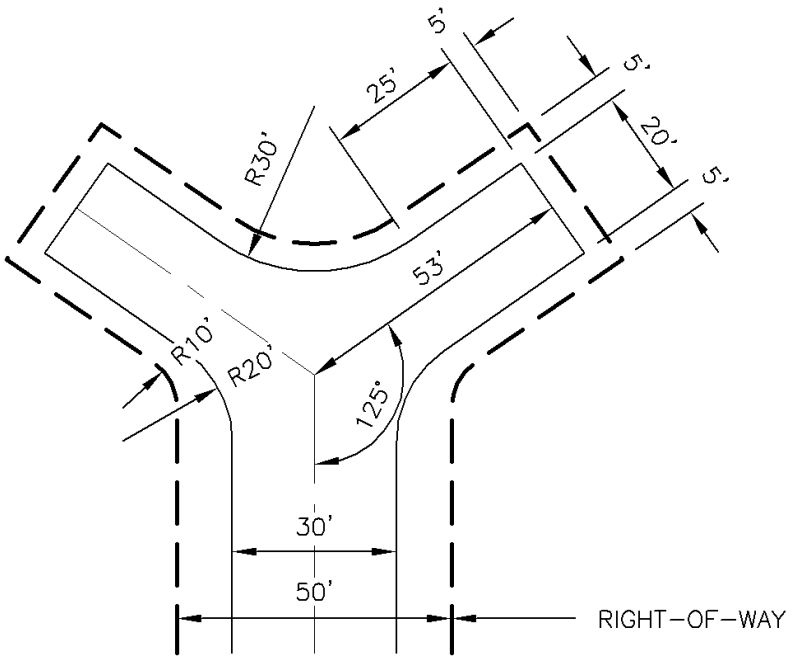

"Y" HAMMERHEAD

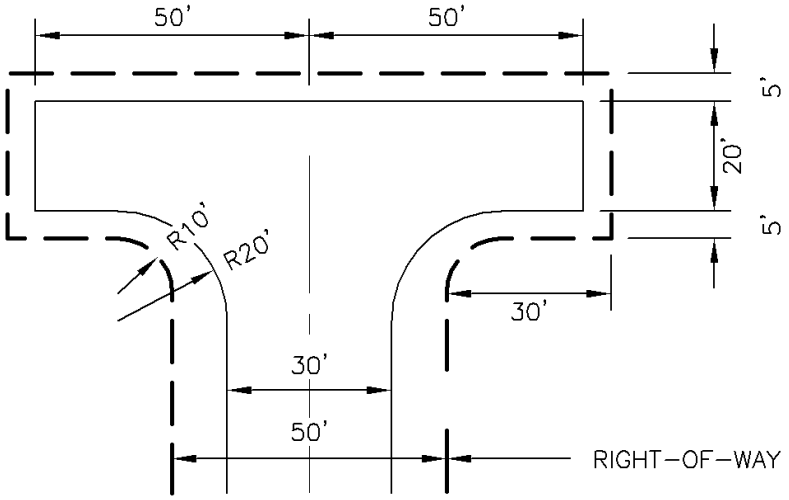

"T" HAMMERHEAD

NOTE:
DRIVEWAYS SHOULD NOT BE LOCATED AT THE 20' WIDE ENDS OF THE HAMMERHEADS

Figure 20 - 4

SECTION 21 DESIGN STANDARDS FOR STREETS

21.01 Local Residential Street Sections: Residential streets are designed based on the density of development proposed and the likelihood of extensive on-street parking. Streets are intended to accommodate vehicular, pedestrian, and bicycle traffic as "Complete Streets". All streets shall be laid out and constructed to one of the following typical sections and shall conform to the requirements contained in Table 21-1 and Table 21-2. The streets shall be constructed in conformity with the design standards contained herein and the City of Concord Construction Standards and Details as most recently adopted.

(1) *Low Density Rural Street Section*: This standard shall apply to rural local residential public streets constructed to provide frontage and direct access to lots with a minimum lot size of two (2) acres or more. Rural residential streets are located in rural areas outside the Urban Growth Boundary, as adopted by the Planning Board in the Master Plan. Low density rural local streets shall be constructed to the standards contained in Table 21-1, Local Residential Street Standards and the cross-section set forth in Figure 21-1 at a minimum;

(2) *Residential Rural Cluster Street Section*: This standard shall apply to all local rural residential public streets constructed to provide frontage and direct access to lots with a minimum lot size of less than two (2) acres in size, submitted as part of a subdivision in accordance with Section 28-4-5, Cluster Development of the City of Concord Zoning Ordinance. Rural cluster streets are located in rural areas outside the Urban Growth Boundary, as adopted by the Planning Board in the Master Plan. Residential rural cluster streets shall be constructed to the standards contained in Table 21-1, Local Residential Street Standards and the cross-section set forth in Figure 21-2 at a minimum; or,

(3) *Residential Urban Local Street Section*: This standard shall apply to residential development within the Urban Growth Boundary. Residential local streets shall be constructed to the standards contained in Table 21-1, Local Residential Street Standards and the cross-section set forth in Figure 21-3 at a minimum.

21.02 Collector, Arterial, and Non-residential/ Mixed Use Local Street Sections: Non-residential local and mixed use streets are located inside the Urban Growth Boundary, as adopted by the Planning Board in the Master Plan, and are applicable to local streets designed primarily to provide access to abutting land uses. Streets are intended to accommodate vehicular, pedestrian, transit,

and bicycle traffic as "Complete Streets". Arterial and collector streets, while by necessity provide access to abutting land use, also have a primary function of carrying traffic from and through residential neighborhoods, as well as both intra- and inter-city traffic. The Board may require roads to be built to collector or arterial standards based on the amount and type of traffic generated by the development, according to the standards set forth herein. All new non-residential/mixed use local streets and collector or arterial streets shall be laid out and constructed to one of the following typical sections, as contained in Table 21-2, Non-Residential Street Standards. The Board may require roads to be built or improved to collector or arterial standards set forth in Table 21-2, based on the anticipated future utilization of the new or improved roadway section. The Board shall use these standards as a guide to requiring both on-site or frontage improvements, as well as off-site improvements required as part of a subdivision approval.

(1) *Rural Collector Section:* This standard shall apply to all rural collector roads classified in the City of Concord Master Plan. Rural collector roads shall be constructed to the standards contained in Table 21-2, Non-Residential Street Standards and the cross-section set forth in Figure 21-5 at a minimum. The Board may require subdivisions for or containing rural non-residential land uses to provide for the construction or improvement of existing access roads to the rural collector standard, based on the amount and type of traffic generated by the development. These standards will provide guidance to the Planning Board for subdivisions fronting on rural collector roads and for establishing appropriate off-site improvements for new rural subdivisions or significant non-residential developments;

(2) *Non-residential/Mixed Use Local Section:* This standard shall apply to all non-residential or mixed use local streets within the Urban Growth Boundary. This standard may be applied to local streets serving non-residential development and mixed residential and non-residential development (mixed-use) areas, depending on the amount and type of traffic being generated by existing and proposed future land uses utilizing the street. Urban collector streets shall be constructed to the standards contained in Table 21-2, Non-Residential Street Standards and the cross-section set forth in Figure 21-4 at a minimum; or,

(3) *Arterial and Collector Street Section:* Arterial and collector streets shall be constructed to the standards contained in Table 21-2, Non-Residential Street Standards and the cross-section set forth in Figure 21-6 at a minimum. The right-of-way shall be sufficient to accommodate

the full development of the subdivision and the anticipated right-of-way needs at full development of the general area of the project. The number of travel lanes and turning lanes shall be adequate for twenty (20) year growth projections. On-street parking is not generally recommended on arterial or collector streets. Upon recommendation of the City Engineer, the Planning Board may allow the substitution of eight (8) to ten (10) foot wide shoulders, road side ditches and swales for sidewalks, and curbing on arterial streets outside the Urban Growth Boundary, as established in the Master Plan.

21.03 ***Other Public Ways***: The design and cross-section of other public ways, such as marginal access roads or service alleys and other types of road ways will be as approved by the Planning Board, upon recommendation from the City Engineer.

21.04 ***Construction Standards and Details:*** The streets shall be constructed in conformity with the design standards contained herein and the City of Concord Construction Standards and Details, as most recently adopted. Applicable standards incorporated by reference include standards for the following:

(1) construction and installation of pavement;
(2) standards for the design of streets including curvature, radii, tangents between curves, vertical alignment, intersection and driveway sight distance;
(3) driveway construction details;
(4) erosion control measures and planting details;
(5) traffic signs and pavement markings;
(6) standards for the construction and installation of storm drains, drainage swales or ditches, underdrains, storm water treatment facilities, and all structures including inlets and outfalls;
(7) water and sewer mains and service connections including public and private pump stations;
(8) sidewalks, curb ramps, off-road trails, and paths;
(9) the design and location of street furniture including bus stops, shelters and postal facilities; and,
(10) private utilities including electric lines and structures, street lights, telecommunication lines and structures, gas, steam, or other private facilities which are allowed by law or permitted under license by the City Council.

21.05 ***Pavement Width***: Streets and common private drives shall be paved to the full width specified in Table 20-1, Standards for Common Residential Private Drives, Table 21-1, Local Residential Street Standards, and Table 21-2, Non-Residential Street Standards, as appropriate. The finished surface must be uniform and even so as to form a close, even union around all curbs and projecting frames. It is the applicant's responsibility to see that all manhole frames, gate boxes, and catch basin frames are at street grade and accessible for their intended use. In all cases other than common private drives, the surfacing shall be a minimum of four (4) inches of hot bituminous pavement per State specifications. Common private drives shall be surfaced with a minimum of three (3) inches of hot bituminous pavement per State specifications or concrete treatment per the City of Concord's Construction Standards and Details.

21.06 ***Sidewalks***: Sidewalks shall be constructed in accordance with the standards contained in Section 22, Sidewalks, Multi-use Paths, and Trails of these regulations.

21.07 ***Curbs***: Curbing on public streets shall be provided as set forth in Table 20-1, Standards for Common Residential Private Drives, Table 21-1, Local Residential Street Standards, and Table 21-2, Non-Residential Street Standards, as appropriate. Curbing shall be provided at all street intersections within the radius of the intersection and within twenty-five (25) feet of the point of tangency back from the intersection radii. Curbing shall be provided on all common private drives at the intersection with a public street and for common private drives providing access to eight (8) or more dwelling units.

21.08 ***Regulatory and Advisory Signs***: Regulatory signs on public streets shall be installed, as set forth in the MUTCD and the City of Concord Code of Ordinances and as may otherwise be required by the Board upon recommendation of the City Engineer. Regulatory signs on private streets and common private drives shall be installed as required by the Board using the MUTCD as a guideline.

21.09 ***Intersections***: The following parameters shall govern the design of all intersections:

(1) *Minimum Curve Radius*: The minimum curve radius at any intersection shall be at least twenty-five (25) feet;

(2) *Grades*: Intersections shall be designed with a flat grade wherever practical. Grades for intersections shall be as set forth in Table 20-1, Standards for Common Residential Private Drives, Table 21-1, Local

Residential Street Standards, and Table 21-2, Non-Residential Street Standards, as appropriate;

(3) *Sight Distance*: Sight distance at intersections and driveways shall conform to AASHTO Highway Safety Design and Operations Guide. Where the line of sight passes over untraveled surfaces, an allowance must be made of two (2) feet for vegetation or snow cover. Where any street intersection will involve earth banks or existing vegetation inside any lot corner that would create a traffic hazard by limiting visibility, the developer shall cut such ground and/or vegetation, including trees, in connection with the grading of the public right-of-way to the extent deemed necessary to provide an adequate sight distance;

(4) *Accessibility*: Accessible curb ramps shall be provided for all sidewalks at intersections and shall be built to City of Concord Construction Standards and Details and the Architectural Barrier Free Design Code for the State of NH, as most recently adopted;

(5) *Street Lights*: Street lights shall be provided at all intersections of public streets and intersections of common private drives serving more than eight (8) residential dwelling units; and

(6) *Street Signs*: Street identification signs and regulatory signs shall be provided at all intersections.

21.10 ***Gravel Shoulders***: Gravel shoulders, where required, shall conform to the City of Concord Construction Standards and Details.

21.11 ***Cul-de-sacs***: Cul-de-sacs or permanent dead end streets shall not exceed 1,000 feet in length. A cul-de-sac shall terminate in a circular turnaround with a right-of-way diameter of 120 feet, an outside edge of pavement diameter of 100 feet, and a center island diameter of 48 feet. The length of dead end roads shall be measured from the pavement edge of the nearest street with multiple accesses to the end of the pavement at the end of the outside edge of pavement for cul-de-sacs.

21.12 ***Hammerhead or T-shaped Turnaround***: Common private drives may be terminated with a T-shaped or hammerhead turnaround. An area thirty (30) feet by thirty (30) feet in width shall be added to each side of the final section of right-of-way on a public street or an equivalent area set aside for a private common drive. The base and pavement shall extend twenty-five (25) feet from the edge of the proposed public or private road at a width equivalent to

the required pavement width for the road or common private drive proposed to be constructed. Common private drives serving two residential lots may be served by a Y-shaped turnaround. Y-shaped turnarounds shall be constructed pursuant to Figure 20-4.

21.13 ***Temporary Turnaround***: A temporary dead end street shall terminate in a T-shaped or hammerhead turnaround. In such cases, an area thirty (30) feet in width shall be added to each side of the final thirty (30) feet of the right-of-way. The base and pavement shall be continued from the traveled way into each of the thirty (30) foot squares to a point which is five (5) feet from each of the exterior limits of these areas.

21.14 ***Bridges***: The design of any bridge shall conform to NHDOT's Standard Specifications for Road and Bridge Construction and shall be approved on a case-by-case basis by the Board, upon recommendation of the City Engineer.

21.15 ***Landscaping and Street Trees***: Landscaping and street trees shall be installed as specified in Section 28, Landscaping and Erosion Control.

21.16 ***Street Lights***: Street lights shall be installed at all street intersections. The Board shall determine on a case-by-case basis for residential subdivisions within the Urban Growth Boundary as set forth in the City of Concord Master Plan and for all non-residential subdivisions, whether or not continuous street lighting is required. The poles and light fixtures shall be as approved by the Board upon recommendation of the Clerk and City Engineer.

21.17 ***Street Signs***: All regulatory, warning, and guide signs in the public rights-of-way shall conform to the standards contained in the MUTCD and shall be required to be installed at the applicant's expense. All private signs allowed under the terms of the Zoning Ordinance shall be located outside the public right-of-ways. The MUTCD shall serve as a guide for signs to be located on private common drives.

21.18 ***Medians***: All medians or traffic islands when used at driveways shall be designed to provide entry access, which shall accommodate an emergency vehicle with inside and outside turning paths of thirty (30) feet and fifty (50) feet, respectively. Direction of response of such vehicles can be taken into consideration. All other medians shall be a minimum of four (4) feet in width if curbed and shall be a minimum of twelve (12) feet if not curbed. The installation of the median shall conform to the City of Concord Construction Standards and Details.

21.19 ***Roundabouts***: Roundabouts shall be constructed with a minimum exterior pavement diameter of one hundred (100) feet and as set forth in Figure 21-7.

Table 21-1
Local Residential Street Standards

	Low Density Rural Street	Rural Cluster Street	Urban Street
Right of Way Width	60 feet	50 feet	50 feet
Parallel Slope Easements - Both Sides	As needed	As needed	As needed
Pavement Width	22 feet with 2 foot gravel shoulders each side	26 feet	30 feet
<u>Slopes</u> Maximum Grade Minimum Grade Maximum Cul-de-sac Grade Maximum Grade at Intersection for through street Cross Slopes Intersection Landing Area	 8% 1% 4% 6% -3% 2% for 60 feet from nearest R.O.W.	 8% 1% 4% 6% -3% 2% for 60 feet from nearest R.O.W.	 8% 1% 4% 6% -3% 2% for 60 feet from nearest R.O.W.
Design Speed	30 mph	25 mph	25 mph
Minimum Radius / Length of Curve	200 feet/100 feet	200 feet/100 feet	200 feet/100 feet
Minimum Tangent Between Curves	150 feet	150 feet	150 feet
Bicycle Facilities	Share the lane	Share the lane	Share the lane
Sidewalks	Not required	One side**	Both sides
Curbing	None*	Sloped granite	Vertical granite
On-Street Parallel Parking	Yes	Yes	Yes

* Sloped granite required on road slopes of 6% or greater and at intersections.
** The Planning Board may require the installation of a sidewalk, if an existing or future connection to the city sidewalk system is feasible.

Table 21-2
Non-residential Street Standards

	Rural Collector Street	Non-Residential /Mixed Use Local Street	Arterial and Collector Streets
Right-of-Way Width	60 feet	60 feet	66-100 feet
Parallel Utility and Slope Easements	10 feet	10 feet	10 feet
Pavement Width	30 feet	34 feet	34-76' feet
Slopes Maximum Grade Minimum Grade Maximum Cul-de-sac Grade Maximum Grade at Intersection for through street Cross Slopes Intersection Landing Area	 8% 1% Not Applicable 6% -3% 2% for 60 feet from nearest R.O.W.	 8% 1% 2% 6% -3% 2% for 60 feet from nearest R.O.W.	 6% 1% Not Applicable 6% -3% 2% for 60 feet from nearest R.O.W.
Design Speed	35 mph	30 mph	35-45 mph
Minimum Radius / Length of Curve	200 feet/100 feet	200 feet/100 feet	200 feet/100 feet
Minimum Tangent Between Curves	150 feet	150 feet	150 feet
Bicycle Facilities	Min. 5 foot shoulder	Min. 5 foot shoulder	Min. 5 foot shoulder
Sidewalks	none	Both sides*	Both sides*
Curbing	None**	Vertical granite	Vertical granite
On-Street Parallel Parking	None	Pavement width widened to 36 feet for parking one side, 40 feet for parking on both sides	Minor collectors only pavement width widened to 36 feet for parking one side, 40 feet for parking on both sides

* In rural areas swales and wider shoulders may be substituted for sidewalks and vertical curbing by the Planning Board upon recommendation of the Clerk and the City Engineer.
** Sloped granite required on road slopes of 6% or greater and at intersections.

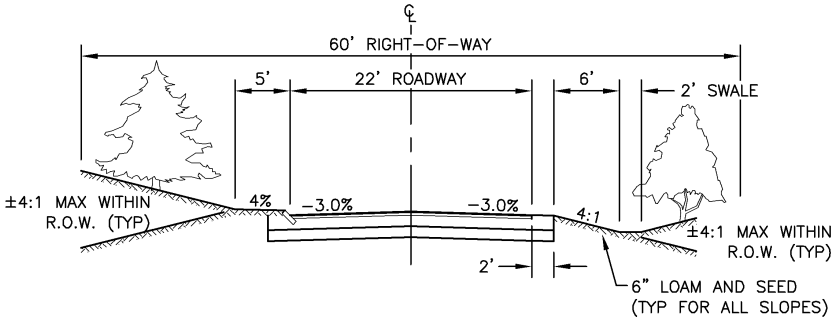

RESIDENTIAL LOW DENSITY RURAL STREET

ROADWAY MATERIALS
4" HOT BITUMINOUS PAVEMENT
1½" WEARING COURSE
2½" BASE COURSE
12" CRUSHED GRAVEL
12" GRAVEL

- SLOPED GRANITE CURB REQUIRED ON ALL STREETS WITH SLOPES ≥6%, AND AT INTERSECTIONS
- VERTICAL GRANITE CURB (7" REVEAL) MAY BE SUBSTITUTED FOR SLOPED GRANITE CURB
- THIS DETAIL IS NOT INTENDED TO SHOW THE FINAL CONFIGURATION OF THE STREET OR DRIVE AND IS MEANT ONLY TO SHOW TYPICALS THAT MAY APPLY

Figure 21 - 1

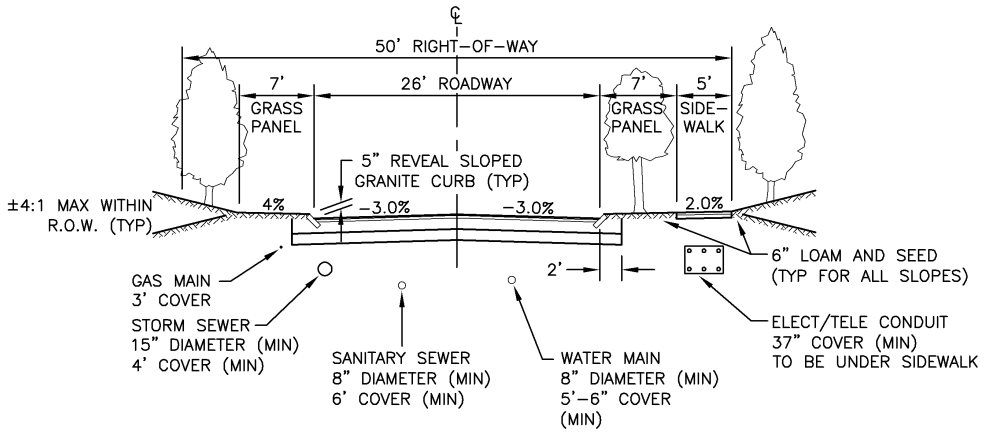

RESIDENTIAL RURAL CLUSTER STREET

ROADWAY MATERIALS
4" HOT BITUMINOUS PAVEMENT
1½" WEARING COURSE
2½" BASE COURSE
12" CRUSHED GRAVEL
12" GRAVEL

SIDEWALK MATERIALS
3" HOT BITUMINOUS PAVEMENT
1½" WEARING COURSE
1½" BASE COURSE
4" CRUSHED GRAVEL
(6" CRUSHED GRAVEL IN AREAS WITH POOR DRAINING SOIL)

- VERTICAL GRANITE CURB (7" REVEAL) MAY BE SUBSTITUTED FOR SLOPED GRANITE CURB
- THIS DETAIL IS NOT INTENDED TO SHOW THE FINAL CONFIGURATION OF THE STREET OR DRIVE AND IS MEANT ONLY TO SHOW TYPICALS THAT MAY APPLY

Figure 21 - 2

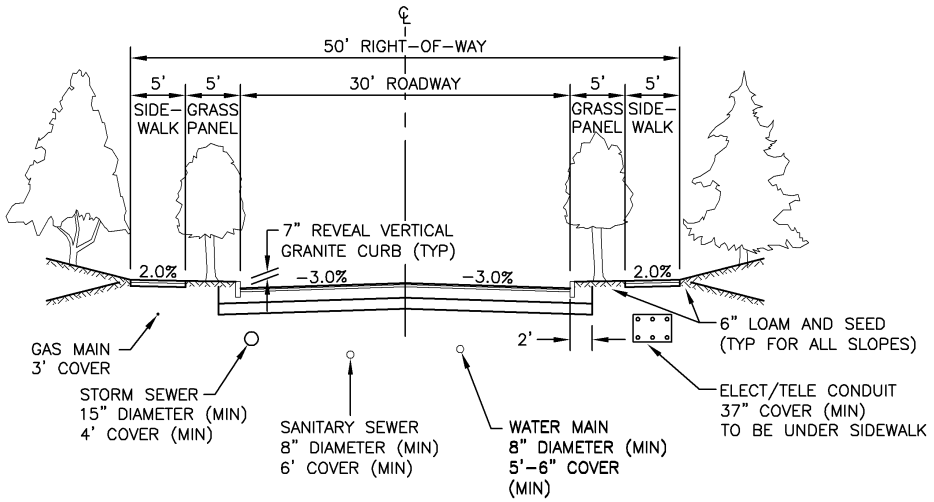

RESIDENTIAL URBAN STREET

ROADWAY MATERIALS
4" HOT BITUMINOUS PAVEMENT
1½" WEARING COURSE
2½" BASE COURSE
12" CRUSHED GRAVEL
12" GRAVEL

SIDEWALK MATERIALS
3" HOT BITUMINOUS PAVEMENT
1½" WEARING COURSE
1½" BASE COURSE
4" CRUSHED GRAVEL
(6" CRUSHED GRAVEL IN AREAS WITH POOR DRAINING SOIL)

- THIS DETAIL IS NOT INTENDED TO SHOW THE FINAL CONFIGURATION OF THE STREET OR DRIVE AND IS MEANT ONLY TO SHOW TYPICALS THAT MAY APPLY

Figure 21 - 3

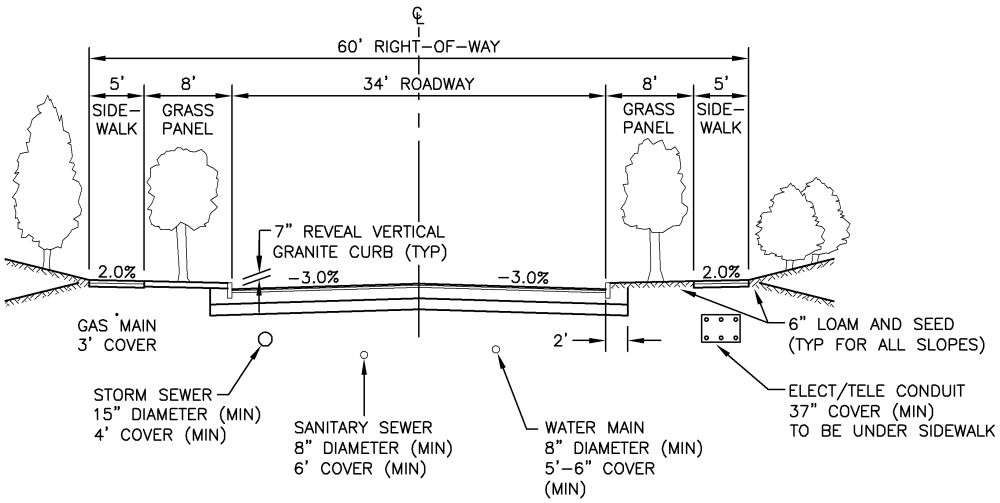

NON-RESIDENTIAL MIXED USE LOCAL STREET

ROADWAY MATERIALS
4" HOT BITUMINOUS PAVEMENT
1½" WEARING COURSE
2½" BASE COURSE
12" CRUSHED GRAVEL
12" GRAVEL

SIDEWALK MATERIALS
3" HOT BITUMINOUS PAVEMENT
1½" WEARING COURSE
1½" BASE COURSE
4" CRUSHED GRAVEL
(6" CRUSHED GRAVEL IN AREAS WITH POOR DRAINING SOIL)

- THIS DETAIL IS NOT INTENDED TO SHOW THE FINAL CONFIGURATION OF THE STREET OR DRIVE AND IS MEANT ONLY TO SHOW TYPICALS THAT MAY APPLY

Figure 21 - 4

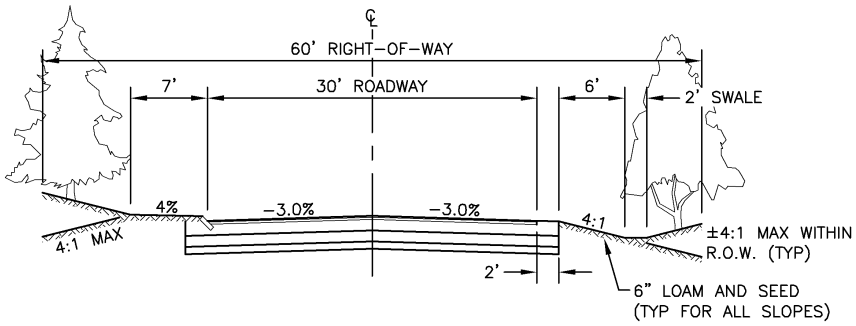

RURAL COLLECTOR STREET

ROADWAY MATERIALS
4" HOT BITUMINOUS PAVEMENT
1½" WEARING COURSE
2½" BASE COURSE
12" CRUSHED GRAVEL
12" GRAVEL
8" SAND

- SLOPED GRANITE CURB REQUIRED ON ALL STREETS WITH SLOPES ≥6%, AND AT INTERSECTIONS
- VERTICAL GRANITE CURB (7" REVEAL) MAY BE SUBSTITUTED FOR SLOPED GRANITE CURB
- THIS DETAIL IS NOT INTENDED TO SHOW THE FINAL CONFIGURATION OF THE STREET OR DRIVE AND IS MEANT ONLY TO SHOW TYPICALS THAT MAY APPLY

Figure 21 - 5

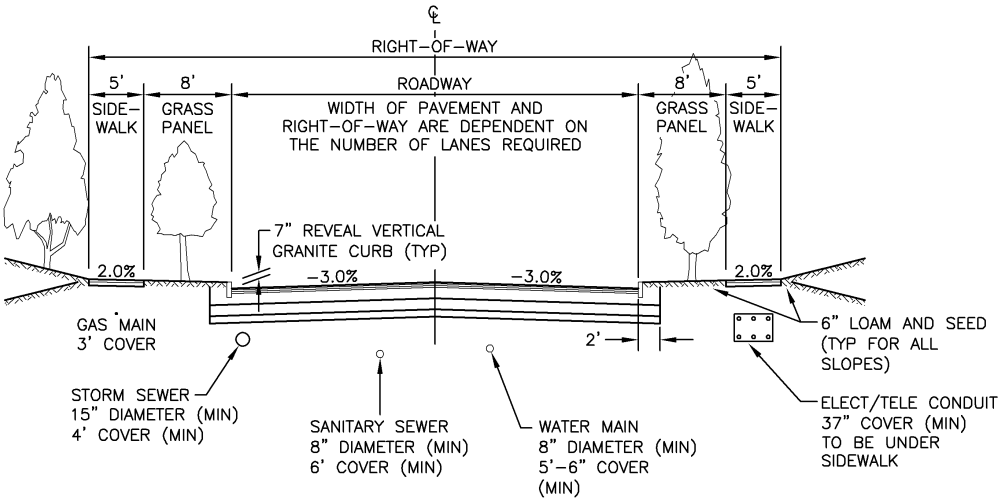

NON–RESIDENTIAL ARTERIAL COLLECTOR STREET

ROADWAY MATERIALS
5½" HOT BITUMINOUS PAVEMENT
1½" WEARING COURSE
2" BINDER COURSE
2" BASE COURSE
12" CRUSHED GRAVEL
12" GRAVEL
8" SAND

SIDEWALK MATERIALS
3" HOT BITUMINOUS PAVEMENT
1½" WEARING COURSE
1½" BASE COURSE
4" CRUSHED GRAVEL
(6" CRUSHED GRAVEL IN AREAS WITH POOR DRAINING SOIL)

- THIS DETAIL IS NOT INTENDED TO SHOW THE FINAL CONFIGURATION OF THE STREET OR DRIVE AND IS MEANT ONLY TO SHOW TYPICALS THAT MAY APPLY

Figure 21 - 6

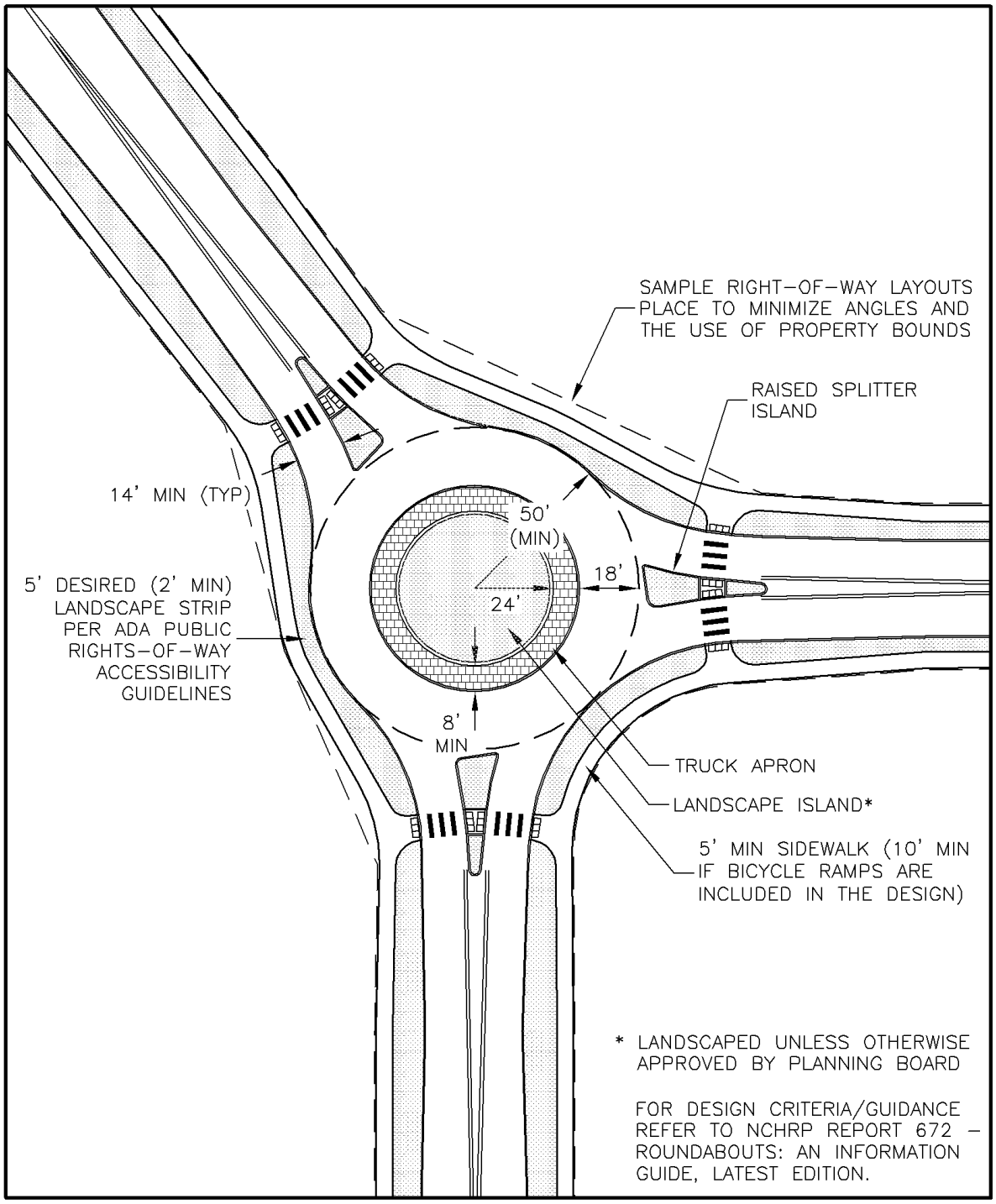

Figure 21 – 7 **Roundabout**

SECTION 22 Sidewalks, Multi-use paths, and Trails

22.01 ***General Requirements***: Within and adjacent to subdivisions, sidewalks and other pedestrian facilities shall be provided in locations which are functional and efficient and which enhance pedestrian safety. Sidewalks shall be functional by providing a path between and among residences, shops, schools, parks, adjacent neighborhoods, and other destinations; shall be efficient in carrying a minimum number of pedestrians along the same path; and shall enhance pedestrian safety by providing an alternative to walking along the edge of the traveled way, where the volume and speed of traffic and the dimensions and physical condition of the roadway would represent hazards to pedestrians.

22.02 ***Sidewalks Required***: Sidewalks shall be provided within the street right-of-way and along private common drives in accordance with the standards and appropriate cross-sections, as set forth in Sections 20, Street Layout and Access Standards and Section 21, Design Standards for Streets and Private Drives.

22.03 ***Arrangement***: The arrangement of sidewalks shall provide for the continuation of sidewalks between adjacent properties for the convenient and safe movement of pedestrian traffic.

22.04 ***Location:*** Sidewalks shall be provided within the dedicated right-of-way of all streets or within dedicated sidewalk easements if, in the opinion of the Planning Board, sidewalks outside the street rights-of-way are required to facilitate pedestrian access within a subdivision, between a subdivision and public property, or from streets to public property.

22.05 ***Connection to Private Property***: For non-residential subdivisions including multi-family development, sidewalk connections shall be made from the street to buildings on the site. The Board may allow the connection to be made from the public sidewalk to the parking lots serving the property provided that the pedestrian connection is not through a parking space, and the Board deems the access to be safe and convenient.

22.06 ***Accessibility***: All sidewalks shall be constructed to be handicapped accessible, including accessible curb ramps at all intersections.

22.07 ***Design Standards***: Sidewalks shall be constructed in conformity to the following minimum standards:

(1) *Width*: Sidewalks shall be a minimum of five (5) feet in width exclusive of curbing. Multi-purpose paths shall be a minimum width of ten (10) feet;

(2) *Slopes*: Sidewalks shall have a transverse slope of two (2%) percent;

(3) *Connections*: At all intersections, the sidewalks shall be constructed across the grass strip to the edge of the traveled way and shall be provided with an accessible curb ramp; and

(4) *Cross Country Easements*: Sidewalk easements outside of a street right-of-way shall be at least twenty (20) feet in width.

22.08 ***Construction Standards***: Preparation of the base shall be accomplished by removing material to a depth of eight (8) inches below finished design grade. Any soft spots of undesirable material shall be removed and replaced with gravel. The excavated area shall be filled with four (4) inches of crushed gravel and rolled. Where poor draining soils are present, six (6) inches of crushed gravel shall be provided. Forms shall be set to grade, then a one and one-half (1 ½) inch binder and one and one-half (1 ½) inch surface course of hot bituminous pavement shall be placed, except at driveways where the binder thickness shall be two (2) inches. Sidewalks shall comply in all respects to the Architectural Barrier Free Design Code for the State of NH and the ADA Standards for Accessible Design, as most recently adopted.

22.09 ***Curb Ramps***: Curb ramps for accessibility shall be provided at street intersections and intersections with common private drives serving more than two dwelling units.

22.10 ***Multi-use Paths*****:** Multi-use paths for pedestrians and bicyclists located off the travel way of a street or road shall be no less than ten (10) feet in width and shall conform to City of Concord Construction Standards and Details. Bicycle and multi-use paths shall be provided with pavement markings and appropriate signage per the MUTCD. Multi-use paths shall be provided with acceptable gates and bollards designed to prevent motorized vehicle use of the paths.

22.11 ***Trails***: Hiking trails, internal pedestrian walking paths, bike paths, cross country ski trails, snowmobile trails, etc. within a subdivision shall be designed and constructed appropriately for the use(s) intended; shall be subject to the approval of the Planning Board as to design; shall be shown on the plat; and shall be set aside in perpetuity. The Planning Board shall,

wherever possible, preserve and enhance existing non-motorized recreational trails and snowmobile trails.

SECTION 23 Storm water Management

23.01 ***General Requirements***: All subdivisions shall make adequate provisions for the management of the quality and quantity of storm water runoff. For all major subdivisions, the volume of storm water runoff shall not exceed pre-development conditions. Where a major subdivision involves the redevelopment of an existing property, the storm water management system shall be designed to reduce the quantity of storm water runoff and improve the quality of the storm water runoff. Subdivisions shall provide for the passage of runoff from abutting properties and rights-of-way, and the subdivision shall not be graded to impound runoff from, or direct it to, abutting properties.

All reasonable efforts shall be made to incorporate non-structural site design techniques to minimize runoff due to development such as maintaining natural buffers, minimizing site disturbance, minimizing impervious cover, using pervious pavement or grassed pavers, and minimizing soil compaction.

23.02 ***Construction Standards***: All public and private storm water drainage facilities shall be constructed to the standards contained herein and the Construction Standards and Details of the City of Concord.

23.03 ***Municipal Storm Drainage System***: The applicant shall make reasonable efforts to infiltrate all or a portion of the subdivision's drainage runoff to minimize impacts on the downstream municipal drainage system. Where a municipal storm water drainage system is available, the applicant shall be required to construct within the subdivision a closed drainage system and connect to the municipal storm drainage system. The Planning Board may approve alternative drainage systems in the following circumstances:

(1) *Existing Water Courses:* The applicant may continue to discharge the same quantity and quality of runoff into existing water courses as occurred prior to site development, provided the water course is not surcharged;

(2) *Infiltration:* Where soil conditions support the infiltration of all or a portion of the site drainage, a storm water infiltration system shall be incorporated into the drainage system for the subdivision;

(3) *Over Capacity:* A municipal storm water drainage system may be at or already over capacity or may become over capacity with the addition of the storm water runoff from the development. In these circumstances, the applicant shall develop and implement alternative drainage strategies to reduce the runoff from the site, so as to not further overtax the existing municipal storm drainage system and,

(4) *Rural Subdivisions*: Rural subdivisions outside the Urban Growth Boundary are not required to connect to an existing municipal storm drainage system.

23.04 ***Rural Low Density Residential Subdivisions***: Outside the Urban Growth Boundary as adopted by the Planning Board as part of the Master Plan where residential lot sizes exceed two (2) acres in size, surface water runoff shall be infiltrated into the ground to the extent possible and accommodated in a system of swales, drainage ways, culverts, and channels to a natural watercourse or to other drainage facilities. Roadside swales and drainage ways shall be provided within the rights-of-way according to the cross-section set forth in Figure 21-1 and along specified easements to carry storm water to existing water courses.

23.05 ***Private Systems***: A maintenance plan shall be provided for each private system outlining the type and frequency of maintenance to be undertaken. Private systems, if commonly held, shall be provided with a permanent means to assure maintenance acceptable to the Planning Board, and said systems shall be permanently maintained.

23.06 ***State and Federal Permits***: The applicant shall obtain State and Federal storm water permits where required. The applicant shall conform to the requirements and conditions of all State and Federal permits, in addition to the requirements contained herein.

23.07 ***Storm Water Management Plan***: A NH Licensed Professional Engineer shall prepare a "Storm Water Management Plan" containing the following components for all subdivisions and shall sign and seal the plan and associated drawings.

(1) Drainage study;
(2) Grading and drainage plan;
(3) Erosion control plan;
(4) Storm water sedimentation and erosion control details;
(5) Storm water construction details; and

(6) In cases where complex drainage systems are required, the applicant may be required to perform a hydraulic analysis of all or portion of the impacted watershed.

23.08 Storm Water Design Standards for Subdivisions with Significant Impact: Subdivisions with 20,000 square feet or greater of disturbed land area are deemed to have significant drainage impacts and shall prepare plans and provide improvements to address the following standards and requirements.

(1) *Storm Events:* Storm water drainage shall be calculated for pre- and post-construction for storms of twenty-four (24) hour duration with a minimum return frequency of once in two years (2-year storm), once in ten years (10-year storm), once in twenty-five years (25-year storm), and once in one hundred years (100-year storm) using the "Rational Method", Technical Release 20 (TR 20) or Technical Release 55 (TR 55), developed by the USDA, National Resources Conservation Service;

(2) *Storm Water Recharge:* Impervious surfaces from subdivisions alter the natural hydrologic cycle by discharging storm water directly into streams or other water bodies, rather than allowing it to infiltrate through the soils and groundwater. New subdivisions shall maintain existing recharge rates to preserve ground water levels and stream base flows. Existing developed areas shall maintain existing recharge rates and shall increase recharge rates as much as is feasible, as determined by the Board upon recommendation of the City Engineer. A minimum separation of four (4) feet shall be maintained between the bottom of an infiltration system and the groundwater;

(3) *Off-Site Flows*: For new subdivisions, the volume of off-site discharge after project development shall not exceed the volume of discharge before development for the 10-year storm event. The peak rate of discharge after project development shall not exceed the peak rate of discharge before development for the 2-year, 10-year, 25-year and 100-year storms. On-site retention or detention facilities shall be provided as necessary to manage off-site flows and to prevent the overloading of existing downstream facilities;

(4) *Pre-treatment*: To prevent premature failure, the design of storm water treatment devices relying on infiltration shall include a pre-treatment device or method that will trap sand and sediments, as well as oil and gas pollutants. Pre-treatment facilities must be designed to

accommodate a minimum of one-year's worth of sediment and shall be located to be easily inspected and maintained;

(5) *Water Quality Standards*: The volume of water to be treated shall be the first one (1) inch of runoff from the total impervious surface area; and

(6) *Design of Water Quality Treatment Facilities*: The design of water quality treatment facilities shall conform to the design parameters of the NHDES, pursuant to their rules and regulations as most recently adopted.

23.09 Storm Water Design Standards for Minor Impact Subdivisions: Subdivisions with less than 20,000 square feet of disturbed land area are deemed to have minor drainage impacts and shall prepare plans and provide improvements to address the following standards and requirements. Calculations, plans, and detail drawings may be consolidated into a single drainage plan and supplemental report.

(1) *Storm Events:* Storm water drainage shall be calculated for pre- and post-construction for storms of twenty-four (24) hour duration, with a minimum return frequency of once in two years (2-year storm) and once in ten years (10-year storm), using the "Rational Method", Technical Release 20 (TR 20) or Technical Release 55 (TR 55), developed by the USDA, National Resources Conservation Service;

(2) *Storm Water Recharge:* Impervious surfaces from subdivisions alter the natural hydrologic cycle by discharging storm water directly to streams or other water bodies, rather than allowing it to infiltrate through the soils and groundwater. New subdivisions shall maintain existing recharge rates to preserve ground water levels and stream base flows. Existing developed areas shall maintain existing recharge rates and shall increase recharge rates as much as is feasible, as determined by the Board upon recommendation of the City Engineer;

(7) *Off-Site Flows*: For new development, the volume of off-site discharge after project development shall not exceed the volume of discharge before development for the 10-year storm event. The peak rate of discharge after project development shall not exceed the peak rate of discharge before development for the 2-year and 10-year storms. On-site retention or detention facilities shall be provided as necessary to manage off-site flows and to prevent the overloading of existing downstream facilities;

(3) *Pre-treatment*: To prevent premature failure, the design of storm water treatment devices relying on infiltration shall include a pre-treatment device or method that will trap sand and sediments and oil and gas pollutants. Pre-treatment facilities must be designed to accommodate a minimum of one-year's worth of sediment and shall be located to be easily inspected and maintained;

(4) *Water Quality Standards*: The volume of water to be treated shall be the first one (1) inch of runoff from the total impervious surface area; and

(5) *Design of Water Quality Treatment Facilities*: The design of water quality treatment facilities shall conform to the design parameters of the NHDES, pursuant to their rules and regulations as most recently adopted.

23.10 ***Flood Hazard Areas***: No net encroachment shall be allowed in the one hundred (100) year flood plain, as defined in Article 28-3-2, Flood Hazard (FH) District of the City of Concord Zoning Ordinance, which will adversely affect water levels or alter the conveyance capacity of the waterway. The Planning Board may, when it deems necessary for the health, safety, or welfare of the present and future population of the area and necessary to the conservation of water, drainage, and sanitary facilities, prohibit the development of any portion of the property which lies within the flood plain of any stream or drainage course. These flood plain areas shall be reserved from any and all destruction or damage resulting from clearing, grading, filling, or dumping of waste material or stumps, except as determined to be necessary by the Board for a water dependent use and/or restoration of previously disturbed sites.

23.11 ***Existing Watercourses****:* Where a subdivision is traversed by a watercourse, drainage way, channel, or stream, there shall be provided a storm water easement or drainage right-of-way conforming substantially to the lines of such watercourse together with a vegetated or landscaped buffer and of such width and construction, or both, as will be adequate for the purpose. The Board may require the dedication, either in fee or by drainage and/or conservation easement, of land on both sides of existing watercourses sufficient to allow for the protection and management of the watercourse or drainage channel including adequate vegetated buffers.

23.12 ***Drainage Easements****:* Drainage easements outside the right-of-way shall be perpetual, unobstructed easements at least twenty-five (25) feet in width. Said

drainage easements shall be provided with satisfactory access for maintenance and construction vehicles. Drainage easements shall be extended to a natural watercourse or the other drainage facilities.

23.13 ***Accommodation of Upstream Drainage Areas***: A culvert, storm drainage pipe, or other drainage facility shall, in each case, be large enough to accommodate potential runoff from its entire upstream drainage area, whether inside or outside the subdivision. The storm drainage pipe or culvert shall be sized appropriately to allow for wildlife movement through the facility.

23.14 ***Private Drainage Facilities in Condominium Subdivisions***: The condominium association shall be responsible for common drainage system operation and maintenance within the subdivision and the boundaries of the condominium. The private system shall be designed to the same standards as set forth in this section. Said facilities shall be provided with satisfactory vehicular access for maintenance and construction.

23.15 ***Lot Drainage and Grading*****:** Lots shall be laid out so as to provide positive drainage away from all buildings, and individual lot drainage shall be coordinated with the general storm drainage pattern for the area. Drainage shall be designed so as to avoid concentration of storm drainage water from each lot to adjacent lots or abutting properties.

23.16 ***Areas of Poor Drainage***: The Planning Board may prohibit the development of any portion of the property identified as wetland and may require the preservation and dedication of such. In areas containing poorly drained soils, the Board may require that studies be prepared by a NH Licensed Professional Engineer relative to the impact of groundwater on the storm drainage system. Depending upon the nature and magnitude of the impacts so identified, the Board may prohibit or require the modification of the development of those portions of the property.

23.17 ***Erosion Control***: Erosion control measures shall be undertaken, as set forth in Section 28.05, Erosion Control and pursuant to all appropriate State and Federal regulations.

23.18 ***Hydraulic Grade Line***: Hydraulic grade lines for open channels and swales shall be specifically delineated on all drainage plans.

23.19 ***Aquifer Protection*****:** The provisions of Article 28-3-6, Aquifer Protection District, of the Zoning Ordinance, shall apply to all proposed subdivisions

within Community Systems Protection Areas, within Non-Transient Non-Community Water Systems Protection Areas, Transient Non-Community Water System Protection Areas, and Domestic Water Systems Protection Areas.

SECTION 24 WATER SUPPLY

24.01 ***General Requirements***: All subdivisions shall make adequate provision for a supply of potable water for domestic consumption and for water supply for fire protection purposes. Within the Urban Growth Boundary as adopted by the Planning Board in the Master Plan, the extension of the municipal water system shall be required to the land on which a proposed subdivision is located, and a municipal water system shall be constructed to serve lots in a proposed subdivision. Outside the Urban Growth Boundary as adopted by the Planning Board in the Master Plan municipal water supply is not planned, and potable water shall be provided by individual wells for each dwelling unit or non-residential principal use of a lot.

24.02 ***Municipal Water System***: For subdivisions within the Urban Growth Boundary as adopted by the Planning Board in the Master Plan, a municipal water system shall be required to be extended on parcels of land which are within fifteen hundred (1,500) feet of an existing municipal water main, providing adequate pressure and fire flow are available as required in Section 24.03, below. Where a municipal water system is not available at the time of the application, but said water system will become available in the future because of inclusion in the City's CIP or because of inclusion in the Master Plan of the municipal water system, the applicant shall provide satisfactory financial guarantees for the installation of water mains which will be suitable for and prepared for connection to the municipal system at the time of its expansion. In that period prior to the availability of the municipal water system, the applicant shall provide individual wells for each dwelling unit or non-residential principal use of a lot

24.03 ***Design Standards for Municipal Water Supply***: Except for subdivisions located within the jurisdiction of the Penacook and Boscawen Water Precinct, which are addressed in Section 24.07, Design Standards for Municipal Water Supply, the following standards shall govern the design and construction of the municipal water system improvements.

(1) *Construction Standards*: The applicant shall install facilities for the supply and distribution of water, including fire protection capabilities,

in a manner prescribed by the City of Concord Construction Standards and Details and the NHDES;

(2) *Water Main Location*: Water mains shall be located within street rights-of-way unless topography dictates otherwise. When located in the right-of-way, water mains and appurtenant facilities shall be located in accordance with the typical street cross-sections, as contained in Section 20, Street Layout and Access Standards and Section 21, Design Standards for Streets and Private Drives;

(3) *Fire Hydrants*: Fire protection design shall conform to the guidelines provided by the Insurance Services Office (ISO) and the City of Concord Fire Department. Fire hydrants shall be provided at a maximum of 600 foot intervals along water mains, so that no lot is further than 300 feet from a hydrant. Water mains shall be looped wherever feasible. If a water line cannot be looped and must be terminated at a dead end due to grade, ownership, or approved construction phasing, the water line shall terminate with a fire hydrant;

(4) *Cisterns*: Cisterns or standpipes from ponds, rivers, and streams are not allowed to provide required fire flows and pressure;

(5) *Cross Country Water Mains*: When water mains are located in easements across private property, said easements shall be perpetual easements at least twenty-five (25) feet in width and shall remain unobstructed by buildings or structures. Said utility easements shall be provided with satisfactory access for maintenance and construction vehicles;

(6) *Valves*: All distribution systems shall be valved to facilitate the isolation of each section of pipeline between intersections of the grid system. Generally, the number of valves at an intersection shall be one less than the number of pipes forming the intersection. It is the intent of these criteria to provide for the isolation of mains that serve areas containing more than twenty-five (25) service connections. Valves should be located at not more than 500 foot intervals in non-residential districts and should be located no further than 800 foot intervals, but no more than one (1) block length, in residential districts;

(7) *Water System Network*: Water systems within subdivisions shall be designed to be part of a looped network of mains wherever possible, to better maintain pressure and volume within the subdivision and throughout the municipal water system. The water system shall be

extended to the perimeter of the subdivision if the Water System Master Plan shows a future service area beyond the subdivision. An extension of municipal water mains shall be required to the middle of the frontage of the subdivision of the furthest subdivided lot, if no further extension is planned or is feasible;

(8) *Pressure and Volume*: The system shall be designed to maintain a minimum pressure of twenty (20) psi at ground level (house sill) at all points in the distribution system under all conditions of flow. The minimum working pressure in the distribution system shall be thirty-five (35) psi. The normal working pressure in the distribution system should be approximately sixty (60) psi to eighty (80) psi. The following specific service elevations shall be used by the City Fire Department in determining compliance with these criteria.

(a)	*High Service Area*	395 feet NGVD
(b)	*Extra High Service – West End Tank*	525 feet NGVD
(c)	*Extra High Service – Snow Pond Tank*	515 feet NGVD;

(9) *Private Booster Pumps*: Private booster pumps shall not be allowed for any individual residential service from the public water supply main, unless a minimum pressure of twenty (20) psi residual pressure can be maintain and a thirty-five (35) psi static pressure can be maintained, as outlined Section 24.03(8) above. Community booster pump stations, inline pumps, and constant pressure stations are not allowed for residential development. Private fire and booster pumps for individual non-residential uses may be required by the Board to provide the required fire flows and pressures based on recommendations of the City Engineer and Fire Department. These facilities shall be constructed in conformance with the standards contained herein, the City of Concord Construction Standards and Details and the standards of the NHDES, as most recently adopted;

(10) *Service Connections*: Service connections shall be stubbed to property lines of individual lots at the time of road or street construction within a subdivision. The Board may require existing substandard service connections to be replaced or upgraded, upon recommendation of the City Engineer or the Penacook and Boscawen Water Precinct, if applicable; and

(11) *Piggy Back Service Connections*: Piggy back service connections are prohibited for multiple dwelling units or non-residential principal uses where more than one metered service are connected in series.

24.04 ***Non-municipal Water Supply***: Where a municipal water system is not required under Section 24.02, Municipal Water System, water supply shall be provided through private wells for each dwelling unit or non-residential principal use on individual lots. Community wells which serve more than a single lot, an individual dwelling unit, or a single non-residential use are expressly forbidden in the City of Concord. Each dwelling unit or each principal non-residential use not served by the municipal water system shall be provided with its own individual well for potable water supply.

24.05 ***Design Standards for Non-municipal Water Supply***: Where municipal water supply is not required, individual private wells shall be provided which shall comply with all standards of the NHDES, and the construction of which shall comply with applicable standards of the NH Water Well Board. The location of each well along with the required NHDES' seventy-five (75) foot wellhead protection radius shall be shown on the subdivision plan. The wellhead protection radius shall be shown entirely on the lot or common open space within the subdivision, unless a protective wellhead protection easement is provided on an abutting property acceptable to the Clerk, City Engineer, and City Solicitor and said easement is recorded in the Merrimack County Registry of Deeds with the subdivision plat.

24.06 ***State and Federal Permits***: The applicant shall obtain all State and Federal water system permits where required. The applicant shall conform to the requirements and conditions of all State and Federal permits in addition to the requirements contained herein.

24.07 ***Requirements and Design Standards for Municipal Water Supply in portions of Penacook***: Within the area of the City served by the Penacook and Boscawen Water Precinct, the applicant shall submit plans prepared, signed and sealed by a NH Licensed Professional Engineer, of facilities for the supply and distribution of water, including fire protection capabilities, in a manner and to the standards prescribed by the Penacook and Boscawen Water Precinct and the NHDES, as maybe amended.

SECTION 25 SANITARY SEWAGE DISPOSAL

25.01 ***General Requirements***: All subdivisions shall make adequate provisions for sanitary sewage disposal facilities. Within the Urban Growth Boundary as

adopted by the Planning Board in the Master Plan, the extension of the municipal sanitary sewer system shall be required to the land on which a proposed subdivision is located, and a municipal sewer system shall be constructed to serve lots in a proposed subdivision. Outside the Urban Growth Boundary as adopted by the Planning Board in the Master Plan municipal sanitary sewage service is not planned, and sanitary sewage disposal shall be accomplished by individual waste disposal systems for each dwelling unit or non-residential principal use located on a lot. Where municipal sanitary sewers are present in the vicinity of a proposed subdivision, the extension of said sewers shall be required to the land on which a proposed subdivision is located and shall be required to serve the lots in a proposed subdivision. If sanitary sewers cannot be connected by gravity flow to the municipal system, sanitary sewage disposal shall be accomplished through the provision of pumped systems acceptable to the City or through individual waste disposal systems.

25.02 ***Municipal Sanitary Sewers***: For subdivisions within the Urban Growth Boundary as adopted by the Planning Board in the Master Plan, municipal sanitary sewers shall be required to be extended on parcels of land which are within fifteen hundred (1,500) feet of an existing municipal sanitary sewer main. An extension of municipal sanitary sewer mains shall be required to the middle of the frontage of the subdivision of the furthest subdivided lot.

25.03 ***Design Standards for Municipal Sanitary Sewers***: The following standards shall govern the design and construction of the municipal sanitary sewer disposal facilities:

(1) *Construction Standards*: The applicant shall install sanitary sewer facilities to serve each lot or dwelling unit in a manner prescribed by the City of Concord Construction Standards and the requirements of the NHDES;

(2) *Sewer Location*: Sanitary sewers shall be located within street rights-of-way, unless topography dictates otherwise. When located in the right-of-way, sewers shall be located in accordance with the typical street cross-sections, as contained in Section 20, Street Layout and Access Standards and Section 21, Design Standards for Streets and Private Drives;

(3) *Cross Country Sewers*: When sewers are located in easements across private property, said easements shall be perpetual easements at least twenty-five (25) feet in width and shall remain unobstructed by

buildings or structures. Said utility easements shall be provided with satisfactory access for maintenance and construction vehicles; and

(4) *Service Connections*: Service connections shall be stubbed to property lines at the time of road or street construction within a subdivision. Existing substandard service connections may be required to be replaced or upgraded by the Planning Board upon recommendation of the City Engineer.

25.04 ***Non-Municipal Sanitary Sewage Disposal***: Where a municipal sanitary sewer system is not required under Section 25.02, Municipal Sanitary Sewers, sanitary sewage disposal shall be provided by individual waste disposal systems for each dwelling unit or non-residential principal use located on a lot and located on lots of sufficient size to assure an area appropriate for two leaching fields for each system, which meet requirements of the NHDES. The required 4,000 square foot septic drain field area required by the NHDES shall be shown on the subdivision plat, along with test pit locations and corresponding test pit logs. Community sewerage systems, which serve more than a single lot or an individual dwelling unit or more than a single non-residential principal use, are expressly forbidden in the City of Concord. Each dwelling unit or each principal non-residential use not served by the municipal sanitary sewer system shall be provided with its own individual waste disposal system.

25.05 ***State and Federal Permits***: The applicant shall obtain State and Federal sanitary sewer permits where required. The applicant shall conform to the requirements and conditions of all State and Federal permits, in addition to the requirements contained herein.

SECTION 26 NON-MUNICIPAL UTILITIES

26.01 ***General Requirements***: All subdivisions shall make adequate provision for non-municipal utilities as may be necessary and appropriate for the subdivision. The applicant is responsible for all coordination with the utility companies to assure that non-municipal utilities are installed in accordance with plans approved by the Board pursuant to these regulations.

26.02 ***Design Standards***: The following standards shall govern the design and construction of the non-municipal utilities for a subdivision:

(1) *Underground Utilities:* Except in the Industrial (IN) Zoning District, all utility facilities including, but not limited to, gas, steam, electric power, telephone, telecommunication, and CATV cables, shall be located underground throughout the subdivision. Whenever existing utility facilities are located above ground on the property proposed for subdivision, the above ground utilities shall be removed and placed underground; and

(2) *Location:* Utilities shall be located within street rights-of-way in accordance with the typical street cross-sections, as contained in Section 20, Street Layout and Access Standards and Section 21, Design Standards for Streets and Private Drives.

SECTION 27 CONSERVATION LAND, PARKS, OPEN SPACE, AND SITES FOR OTHER PUBLIC USES

27.01 ***General Requirements***: The Board may require the protection or reservation of areas or sites suitable to the needs created by a subdivision for open space, parks, or other public facilities. Any land to be set aside shall be protected or encumbered by an easement, the form and content of which shall be acceptable to the Clerk of the Planning Board and City Solicitor.

27.02 ***Easements and Covenants***: Land reserved or dedicated for conservation or recreation purposes, whether publicly or privately owned, shall be subject to sufficient easements and deed restrictions to assure permanence of use for open space and recreation purposes. Conservation and recreation land intended to remain in private ownership shall be deeded in such a way that will assure operation or maintenance of the land in an orderly manner suitable for the purpose intended. If private ownership of common open space is maintained by a property owners' association or condominium association, an undivided proportionate interest shall be deeded to each property owner.

27.03 ***Design Standards***: Land required to be dedicated or reserved shall be of suitable size, dimension, topography, and general character and shall have adequate road access for the particular purposes envisioned by the Planning Board. The area shall be shown and marked on the plat.

(1) *Recreation Land*: Land reserved for recreation purposes shall be of a character and location suitable for use as a playground, play field, or for other recreation purposes and shall be relatively level and dry. A recreation site shall have frontage on one (1) or more streets.

(2) *Preservation of Existing Features*: Existing trees shall be preserved wherever feasible on conservation and recreation sites within the subdivision, unless otherwise directed by the Board. Due regard shall be given to preservation of existing features, trees, scenic points, and other natural and historic resources within the conservation open space. Forested and brook areas shall be left natural; active recreation open space shall be graded and revegetated appropriately to support the proposed recreation use.

(3) *Land Alteration*: There shall be no depositing, dumping, or storage of waste or other natural or man-made material, supplies, or equipment on any subdivision land designated for recreational or conservation use. Removal of or stripping topsoil or surplus materials from conservation or recreation areas shall not be permitted. No work, removal, or filling shall be done, nor shall the existing natural characteristics of the land be altered from the original condition, until a plat has been approved by the Board.

(4) *Additional Landscaping*: Landscaping shall be required within areas of parks and conservation areas in accordance with the Zoning Ordinance and otherwise, as deemed appropriate by the Planning Board.

(5) *Cluster Residential Subdivisions:* The Planning Board shall specify the location, size, and shape of the proposed open space required for Cluster Subdivisions, as set forth in Article 28-4-7, Cluster Development of the City of Concord Zoning Ordinance.

SECTION 28 LANDSCAPING AND EROSION CONTROL

28.01 ***Landscape Plans***: A landscape plan designed to preserve existing natural and cultural resources and features, maintain and enhances wildlife habitat, establish vegetative buffers, conserve water resources, enhance the streetscape, and support on-site storm water control shall be submitted with all major subdivision applications and when otherwise required by the Planning Board. The landscape plan shall be prepared by a NH Licensed Landscape Architect, who shall stamp and seal the plans, and shall contain both graphic and written specifications for the design, planting and maintenance of the proposed landscape features.

28.02 ***Preservation***: Existing vegetation or cultural and natural features, which would add value to a residential, commercial, or industrial development or to the city as a whole, shall be preserved wherever possible. Existing natural features of special interest such as large trees with historic significance, existing tree groves, watercourses and falls, beaches, historic sites, vistas, and similar unique assets shall be located on the landscape plan.

28.03 ***Land Clearing Restriction***: No trees shall be removed from any subdivision nor any change of grade of the land affected, until approval of the subdivision plat has been granted. Grading and clearing should be minimized, so as to avoid creating undue erosion or interruption of natural drainage ways. Construction methods which cause the least disturbance to the environment as possible shall be used, and only manageable portions of the property as specified in the phasing plan shall be disrupted at any one time. NHDES AOT standards per Chapter Env-Wq 1500 shall be used by the City Engineer to define manageable portions of the property to be cleared in each phase.

28.04 ***Required Landscaping Improvements***: Landscaping shall be provided to supplement the natural features which are preserved within the subdivision and to enhance those portions of the subdivision in which natural features and vegetation are destroyed by construction. The following landscape improvements shall be required as applicable by the Planning Board:

(1) *Preservation of Natural Features:* Existing trees shall be preserved wherever feasible or unless otherwise directed by the Board. Due regard shall be given to the preservation of existing features including, but not limited to, wetlands, ponds, streams, lakes and rivers, trees and woodlands, scenic points, and other natural and historic resources within the subdivision. The Board may require a modification to the subdivision to preserve these features;

(2) *Preservation of Existing Trees*: The methods for the preservation of existing trees shall be noted on the landscape plan. Maximum effort shall be made to preserve small stands of trees rather than individual trees to minimize the potential for serious damage due to wind, grade changes, and soil compaction. No construction materials, equipment, vehicles, or temporary soil deposits shall be located within the drip line of existing trees. Protective barriers, such as silt fencing or construction fencing, shall be installed around each plant and/or groups of plants that are to remain onsite. The applicant shall be responsible for replacing any trees proposed to be retained, which have been damaged or destroyed by construction activities;

(3) *Planting Strips and Shoulders*: A planting strip at least five (5) feet in width shall be provided between curbs and adjacent sidewalks. Where curbs and sidewalks are not required, shoulders shall be graded to a slope not greater than three to one (3:1). Planting strips and shoulders shall be loamed, seeded, and fertilized as set in this Section;

(4) *Revegetation*: Grading shall be completed in accordance with the approved final subdivision plat. All disturbed land shall be re-covered with loam with a minimum depth of at least six (6) inches. The loam shall be fertile, natural soil typical of the locality and free from large stones, roots, sticks, clay, peat, weeds, and sod and obtained from a naturally well drained area. It shall not be excessively acid or alkaline nor contain toxic material harmful to plant growth. The loam shall contain no particles over two (2) inches in diameter. When possible, topsoil from proposed residential lots shall be redistributed, so as to provide the required cover. All disturbed areas shall be seeded in accordance with the City of Concord Construction Standards and Details. The Planning Board may require the planting of trees and shrubs in areas that are to be re-graded;

(5) *Vegetative Buffer:* A vegetative buffer shall be used to visibly separate one use from another or to shield or block noise, light, or other nuisances. Existing natural features that provide buffers between lots or sections of a subdivision shall be preserved to enhance privacy and attractiveness. If a natural buffer does not exist, the Planning Board may require a buffer to be constructed. The buffer may include fences and berms, as well as the planting of trees and shrubs to establish the required screening. If plantings are used to create the buffer, the mass of trees and shrubs must have growth characteristics sufficient to form a year-round effective screen within three (3) years of planting;

(6) *Street Trees*: One tree shall be planted on average for every thirty (30) feet of frontage for lots within the Urban Growth Boundary excluding frontage for driveways, as set forth in the City of Concord Master Plan and on average for every fifty (50) feet in streets outside the Urban Growth Boundary. Street trees shall be provided along existing and proposed streets and shall be planted in the planting strip within the right-of-way for both sides of all streets. The Board may allow the required street trees to be planted on private property within ten (10) feet of the edge of the right-of-way. Existing, noninvasive trees with a minimum diameter of four (4) inches preserved within ten (10) feet of

the proposed or existing right-of-way shall count in meeting these requirements. All proposed street trees shall conform to the following standards:

(a) Trees shall be salt and drought-tolerant and native or non-invasive non-native species and shall have a structure and growth form which prevents them from obstructing sidewalks, walkways, and overhead utilities. The use of deciduous shade trees will be encouraged; however, trees located under utility wires should be a low-growing species;

(b) Trees shall have a caliper no less than two and one-half (2 ½) to three (3) inches at the time of planting. The caliper of a tree is the diameter of the tree measured at six (6) inches from the ground for trees four (4) inches and under in caliper and measured at twelve (12) inches from the ground for trees measuring over four (4) inches in caliper;

(c) Proposed trees shall be selected to encourage biological diversity. No more than twenty-five (25) percent of the trees to be planted in any development shall be of the same species. When more than 100 trees are to be planted, no single tree specie shall consist of more than fifteen percent (15%) of the total planted. No more than twenty-five percent (25%) of the trees to be planted shall be classified as ornamental trees, and the balance of the required trees shall be shade trees. Low growing, ornamental trees are recommended for planting under overhead utility lines; however, the majority of trees to be planted shall be shade trees appropriate for use in urban areas and along streets;

(d) Trees shall be located to avoid obstructing minimum sight distances at intersections;

(e) Trees shall be located to avoid the interference of root systems with underground utilities; and

(f) All trees shall be planted in accordance with the City of Concord Construction Standards and Details. Mulch shall be used to retain soil moisture and moderate temperature; however, the thick application of mulch around the root collar of the tree will not be allowed;

(7) *Cul-de-sac Islands:* Existing native vegetation within cul-de-sac islands shall be preserved wherever possible. If the existing vegetation cannot be preserved, the island shall be replanted with low-maintenance native or non-invasive vegetation. One tree shall be required per 500 square feet of land area within the cul-de-sac island. Cul-de-sac islands shall not be used for drainage retention/detention basins or ponds;

(8) *Vegetation Standards:* All landscaping shall be native or non-invasive species appropriate for the climate, soil conditions, and hydrology of the land. Invasive species as listed by the State of NH shall not be used in any landscape plan. The plant hardiness, as defined by the most recent version of the USDA Plant Hardiness Zone Map, must also be suitable for the Concord region;

(9) *Undesirable Growth and Debris*: Existing invasive species shall be removed from the subdivision. All trash, construction debris, and material shall be removed from each lot. Dead and dying trees which present a potential hazard to existing and proposed structures shall be removed; and

(10) *Additional Landscaping*: Landscaping shall be required in accordance with the Zoning Ordinance and as otherwise deemed appropriate by the Planning Board.

***28.05 Erosion Control*:** All disturbed areas shall be revegetated, and all sediment shall be retained on site. Disturbed areas shall be restored pursuant to the City of Concord Construction Standards and Details, the NH Department of Environmental Protection Services regulations, and the US Environmental Protection Agency's National Pollution Discharge Elimination System (NPDES) requirements. Erosion control measures shall be installed and maintained to prevent sediment from leaving the site or entering the City or State storm drainage system, intermittent or perennial streams, wetlands, ponds, and other surface waters.

(1) *Prior to Site Disturbance:* An Erosion Protection and Sedimentation Control (EPSC) plan shall be submitted and shall be reviewed and approved by the City Engineer. The limits of disturbance shall be clearly marked with tape, signs, or orange construction fencing prior to the start of clearing of the site or phase of development. Appropriate erosion and sedimentation control measures shall be installed prior to soil disturbance.

(2) *Disturbed Areas*: Wherever practical, natural vegetation shall be retained. Areas exceeding one (1) acre shall not be disturbed without a sequencing plan that requires phased clearing and soil stabilization. For active construction, a perimeter sediment control system shall be installed and maintained. Disturbed areas remaining idle for more than fourteen (14) days shall be stabilized, including soil stockpiles.

(3) *Monitoring and Maintenance:* Monitoring and maintenance of erosion and sediment control measures through the course of construction is required.

(4) *Final Stabilization:* A site shall be deemed to be stabilized when it is in a condition in which the soils on the site will not erode under the conditions of a ten (10) year storm. Temporary sediment and erosion control devices shall not be removed until permanent stabilization is established for the entire site or phase of the development. All temporary erosion and sediment control measures shall be removed after the completion of construction.

28.06 ***Site Stabilization Guarantee:*** A site stabilization guarantee shall be provided to insure that sites are properly stabilized. The guarantee shall be in the form of a cash deposit or a letter of credit from a NH bank. The City Engineer may call said financial guarantee and stabilize a disturbed site if, upon notice, the applicant has not restored a site not actively under construction to a stabilized condition.

28.07 ***Wetland Buffer Marking:*** Wetland buffers shall be clearly and permanently marked before, during, and after construction on the land proposed for subdivision. Buffers need not be marked in areas where disturbance is unlikely, as determined by the Clerk of the Board upon advice of the Conservation Commission. Building permits shall not be issued until the wetland buffers are marked.

SECTION 29 FIRE PROTECTION

29.01 ***Residential Sprinklers Required*:** New residential units constructed on lots or as condominium units in subdivisions which are not served by municipal water supply shall be required to have automatic fire sprinkler systems installed in each dwelling unit. The automatic fire sprinkler systems shall be designed and installed in compliance with the National Fire Protection Association Standard for the Installation of Sprinkler Systems in One- and Two-Family Dwellings and Manufactured Homes (NFPA 13D) or the Standard for the Installation of Sprinkler Systems in Residential Occupancies

up to and Including Four Stories in Height (NFPA 13R), as applicable. All other uses proposed within a subdivision shall be required to conform to the applicable standards for sprinkler systems contained within the State Building Code, as well as applicable NFPA requirements for fire suppression systems.

29.02 ***Plat Requirements*****:** Plats for all new subdivisions which are subject to the requirement for the installation of automatic fire sprinkler systems pursuant to Section 29.01 of these Regulations, shall be annotated to indicate that all new residential units to be constructed within the subdivision shall have automatic fire sprinkler systems installed in each unit, and that such automatic fire sprinkler systems shall be duly maintained.

29.03 ***Exemptions to the Requirements for Residential Sprinkler Systems:*** Residential structures existing at the time of a subdivision application and lots of record which were created prior to the initial adoption of this Section on June 3, 2010, shall not be subject to the requirement for the installation of automatic fire sprinkler systems, unless a requirement for the installation of automatic fire sprinkler systems was a condition of a prior approval of a subdivision which created such a lot or condominium unit. In addition, the following accessory structures are exempt from the requirement for the installation of automatic fire sprinkler systems:

(1) Carports and greenhouses;
(2) Detached garages not used for human habitation; and
(3) Sheds, barns, and other auxiliary structures not used for human habitation.

29.04 ***Gated Access*****:** Where access to a proposed subdivision is proposed through a gated driveway, access gates shall be constructed to standards for gates with preemption control established by the City of Concord Fire Department. A permanent means to assure maintenance acceptable to the Planning Board shall be created to maintain the gated access.

29.05 ***Gated Emergency Access:*** Where emergency access is proposed by way of a secondary gated driveway, an emergency access gate shall be constructed to standards for gates with preemption control established by the City of Concord Fire Department and shall be maintained in perpetuity. A permanent means to assure maintenance acceptable to the Planning Board shall be created to maintain the emergency access, including snow removal.

Subdivision Regulations

Chapter 5
Administration and Enforcement

SECTION 30 Financial Guarantees

SECTION 31 Completion and Maintenance of Improvements

SECTION 32 Special Investigative Studies – Third party Review

SECTION 33 Traffic Impacts and Traffic Studies

SECTION 34 Conditional Use Permits

SECTION 35 Administration and Enforcement

Glossary

Tables

Figures

Appendices

SECTION 30 FINANCIAL GUARANTEES

30.01 ***Financial Guarantees*****:** If the Planning Board does not require that all public and common private improvements be installed and dedicated prior to signing of the subdivision plat by the Chair and Clerk of the Planning Board, a financial guarantee shall be provided to secure the installation of the public and common private improvements. The applicant shall provide an acceptable financial guarantee for all public and common private improvements, together with easements for any public rights-of-way, utility or storm drainage easements, slope and access easements, conservation easements, agreements to provide a private easement, public improvement guarantee or any other required legal document.

30.02 ***Acceptable Financial Guarantee*****:** The following types of financial guarantees are acceptable to assure the completion of the required improvements:

(1) A letter of credit drawn on a NH bank payable to the City and deposited with the City of Concord;
(2) A surety bond issued by a surety company authorized to do business in NH, to be filed with the City. Surety bonds shall either be self-calling or open ended until the bonded improvements are complete;
(3) Cash to be deposited with the City under an escrow agreement; and
(4) Other types of guarantee as may be deemed acceptable by the City Solicitor.

30.03 ***Amount of Financial Guarantee***: The amount of the financial guarantee shall be approved by the City Engineer, as sufficient to secure to the City the satisfactory construction and installation of the required public and private improvements, including contingency and inflation factors. A NH Licensed Professional Engineer shall submit a construction cost estimate acceptable to the City Engineer, which includes breakdowns by quantity of material and unit costs, along with contingencies, prior to the presentation of any financial guarantee.

30.04 ***Legal Provisions*****:** All financial guarantees shall comply with all statutory requirements and shall be satisfactory to the City Solicitor as to form, sufficiency, and manner of execution as set forth in these regulations.

30.05 ***Release of Financial Guarantees*****:** The release of a financial guarantee shall not be undertaken until the City Engineer has submitted a certificate stating that all required improvements have been satisfactorily completed, an acceptable as built plan has been submitted, a maintenance guarantee has been

provided pursuant to Section 30.07, Maintenance Guarantee, and the public improvements are ready for acceptance by the City Council.

30.06 ***Reduction of Financial Guarantees*****:** A partial release of a financial guarantee may be authorized by the City Engineer, upon completion of a significant portion of the subdivision and then only to the ratio that the cost of the public or private secured improvements so completed relates to the total cost of the improvements for the subdivision plat. In no event shall a financial guarantee be reduced below twenty-five percent (25%) of the principal amount, until all public improvements are completed and accepted by the City Council and all required private improvements are complete. For private improvements, a financial guarantee shall be reduced upon satisfactory completion of the required private improvements and then only to the ratio that the cost of the private improvement so accepted bears to the total cost of the required private improvements for the subdivision plat. In no event shall a financial guarantee be reduced below twenty-five percent (25%) of the principal amount, until all public or secured private improvements are completed to the satisfaction of the City Engineer.

30.07 ***Maintenance Guarantee*****:** The applicant shall be required to file a maintenance guarantee with the City, prior to acceptance of the public improvements, in an amount considered adequate by the City Engineer and in a form satisfactory to the City Solicitor, in order to assure the satisfactory condition of the required improvements, including all lot improvements on the individual subdivided lots for a period of two (2) years after the date of their acceptance by the City Council.

30.08 ***Site Stabilization Guarantee:*** The applicant shall provide a site stabilization guarantee to the City of Concord, in order to assure the stabilization of a disturbed site, in an amount acceptable to the City Engineer in the form of a letter of credit or cash deposit. The City Engineer may call said financial guarantee and act to stabilize a disturbed site, if upon notice the applicant has not restored the site, and the property is not actively under construction.

30.09 ***Construction Prior to Recording:*** An applicant may elect to begin construction of improvements prior to the recording of the subdivision. No construction or land clearing may occur until the construction plans are approved by the Clerk and the City Engineer, inspection fees are paid, State and Federal permits are obtained, all preconstruction conditions of the Board are addressed, and a site restoration bond is in place. Where work is occurring in an existing City right-of-way or involves municipal infrastructure, the site restoration bond shall include a guarantee sufficient to

complete and/or restore the right-of-way and municipal infrastructure to pre-existing conditions.

SECTION 31 COMPLETION AND MAINTENANCE OF IMPROVEMENTS

31.01 ***Completion of Required Improvements***: The period within which the required improvements must be completed shall be specified by the Planning Board in its approval of the final subdivision plat; shall be incorporated in the financial guarantee; and shall not exceed two (2) years from date of plat recordation or shall not exceed two (2) years from the commencement of each phase for a phased approval. The Planning Board may, upon proof of difficulty, extend the completion date as set forth in such financial guarantee for a maximum period of one (1) additional year. At any time during the period of such financial guarantee, a substitute guarantee may be accepted by the City provided that the guarantee conforms to the requirements of Section 30, Financial Guarantees.

31.02 ***Temporary Improvements***: The applicant shall build and pay for all costs of temporary improvements required by the Planning Board and shall maintain the same for the period specified by the Planning Board. Prior to construction of any temporary facility or improvement, the developer shall file with the City a separate suitable financial guarantee for temporary facilities which shall insure that the temporary facilities will be properly constructed, maintained, and removed.

31.03 ***Costs of Improvements***: All required improvements shall be made by the applicant, at the applicant's expense, without reimbursement by the City.

31.04 ***Failure to Complete Improvements*****:** If the required improvements are not completed within the period specified by the Planning Board when approving the plat, the approval shall be deemed to have expired. The Clerk may thereupon declare the financial guarantee to be in default and may use the proceeds to have the improvements installed, regardless of the extent of the building development at the time the financial guarantee is declared to be in default.

31.05 ***Inspection of Improvements***: The Clerk and the City Engineer shall be responsible for inspecting the required public and private improvements and may assess the applicant all or a portion of the cost, including overhead, of the necessary inspections. If the City Engineer finds, upon inspection, that any of the required improvements have not been constructed in accordance with the

plans as approved by the Board and the City of Concord Construction Standards and Details, the applicant shall be responsible for reconstructing the improvements and the cost of same.

31.06 ***Acceptance of Public Streets***: An applicant shall request acceptance of a public street upon completion of work. Completion of work includes the completion of all public improvements including paving, drainage, utilities, and public streetscape improvements including sidewalks, signs, and landscaping. Upon recommendation from the City Engineer that the improvements have been completed, the City Council shall consider the acceptance of a street constructed and prepared in accordance with the terms of these regulations.

31.07 ***Conditional Acceptance of Public Streets***: Upon substantial completion of work, an applicant may request a conditional acceptance of a public street for a period not to exceed two (2) years. Substantial completion includes the completion of all public improvements including paving, drainage, utilities, and public streetscape improvements including sidewalks, signs, and landscaping, etc., with the exception of the final paving course. The applicant shall prepare the street for public use including the installing all utility structure frames, grates, and covers at binder course grade. Upon recommendation from the City Engineer that the improvements have been substantially completed, the City Council may consider the conditional acceptance of a street constructed and prepared in accordance with the terms of this section. In granting conditional acceptance of a street, the City Council may establish such terms and conditions as it may deem necessary to ensure full and final completion of the public improvements within the two (2) year period.

31.08 ***Interim Maintenance of Conditionally Accepted Streets***: Any street which is conditionally accepted by the City Council shall be open for all uses normally allowed on a public street. The City shall assume responsibility for services including snow plowing and other services normally provided by the City to the residents and tenants along a street as if it were fully completed and accepted. The applicant will remain responsible for maintaining all public improvements through the interim maintenance period, including street sweeping, cleaning of catch basins, and keeping all public ways free of construction debris and equipment.

31.09 ***Fulfillment of Conditions Acceptance of Public Streets:*** Upon completion of the final paving course and all other conditions established by the City Council in granting a conditional acceptance of a street, the applicant shall request the City Engineer to certify that all public improvements are complete,

in good working order, and in good repair. Once the City Engineer certifies to the City Council that all conditions of acceptance have been fully satisfactorily completed, the street shall be deemed thereafter to be a fully accepted City street, with all the maintenance responsibilities accruing to the City. At this time the warranty period will commence.

31.10 ***As-Built Plans***: The applicant's engineer or surveyor shall submit to the City Engineer a detailed as-built survey of the subdivision, indicating location, dimensions, materials, and other information required by the City Engineer. The as-built survey shall also be submitted in digital format and media conforming to the City Engineering Division's as-built checklist. A NH Licensed Professional Engineer shall certify to the City Engineer that the layout of the line and grade of all public improvements is in accordance with the construction plans for the subdivision as approved by the Board.

31.11 ***Maintenance of Improvements during Construction*****:** The applicant shall be required to maintain all improvements on the individual subdivided lots and provide for snow removal on streets and sidewalks, until acceptance of said public improvements by the City Council.

31.12 ***Issuance of Building Permits*****:** No building permits shall be issued prior to the recording of the subdivision plat in the Merrimack County Registry of Deeds by the Clerk of the Planning Board.

31.13 ***Issuance of Certificates of Occupancy:*** No certificate of occupancy for any building in the subdivision shall be issued prior to the completion of the improvements and acceptance, or conditional acceptance, of the public streets by the City Council. No certificate of occupancy for any building in a subdivision with private streets shall be issued until the utilities, drainage, and street improvements required for the subdivision or subdivision phase are substantially complete.

31.14 ***Consumer Protection Legislation and Conflicts of Interest Statutes*****:** No building permit or certificate of occupancy shall be granted or issued, if an applicant or his authorized agent have violated any Federal, State, or local law pertaining to consumer protection of real estate land sales, promotion, or practices or any applicable conflicts-of-interest legislation with respect to the lot or parcel of land which is the subject of the permit or certificate, until so ordered by a court of competent jurisdiction. With respect to said lot or parcel of land, in the event a building permit or certificate of occupancy has been granted or issued, it shall be subject to revocation by the City of Concord until so ordered otherwise by a court of competent jurisdiction provided that in no

event shall the rights of intervening innocent third parties in possession of a certificate of occupancy be prejudiced by any such revocation.

SECTION 32 SPECIAL INVESTIGATIVE STUDIES – THIRD PARTY REVIEW

32.01 ***General Requirements***: The Planning Board is empowered under RSA 676:4, I(g) and RSA 673.16, II to request special investigative studies and to impose reasonable fees to cover its administrative expenses and costs of third party review of impact and investigative studies, the review of documents, construction plans, and plats, and the review of other matters which may be required by a particular subdivision application.

32.02 ***Types of Studies***: Traffic studies and water system evaluations are the most common impact studies required for subdivision applications. Other types of studies may be required including, but not limited to, sanitary sewer study, flood hazard study, noise study, nuisance lighting study, hydrological study, wildlife study and habitat evaluation, fiscal impact study, historic resource study, and school impact study.

32.03 ***Review Fees*****:** All special studies and third party reviews shall be performed at the applicant's expense. The scope of services shall be approved by the Clerk prior to the commencement of any special study or third party review. If an independent consultant is hired by the City to perform a special study or to review all or part of an application, the Clerk shall approve the scope and cost estimate for the proposed services. No work may commence until the applicant has deposited with the City, in a special account for this purpose, funding in the amount equal to 125% of the estimated cost of services. Any funds not expended for the special study or third party review shall be returned to the applicant or successor in title.

32.04 ***Additional Fees:*** Additional fees shall be assessed upon reaching the upper limit of the consultant's estimate. Additional expenses may be justified for the following reasons: if the applicant or the Board expands the scope of services; the applicant substantially amends the application; additional meetings involving the consultant(s) are requested by the applicant; the consultant's appearance is requested at the Planning Board, City Council or Zoning Board of Adjustment beyond what was initially anticipated; or, the consultant's attendance is required at meetings with regional, State, or Federal agencies or boards which were not anticipated in the earlier scope of services.

SECTION 33 TRAFFIC IMPACTS AND TRAFFIC STUDIES

33.01 ***Thresholds:*** Subdivisions that are expected to generate greater than 200 vehicle trip ends per day or greater than twenty (20) peak hour trip ends shall be required to prepare a traffic study, unless the Clerk of the Board finds that the development is in an area or corridor recently studied or the traffic study will not provide any new information that will be relevant for consideration of the proposed subdivision plan. In such instances, the Clerk shall document his/her findings to the Board at the time the Board considers the application. The Board may require a traffic study for smaller subdivisions if concerns exist on the Board about the level and extent of impact of the subdivision on the roadway system, about the suitability and safety of the proposed access to the subdivision, and about impacts of increased traffic on the quality of life for residents on streets impacted by the subdivision. An applicant may request to prepare and have independent review of a traffic study for a subdivision with projected traffic levels below the threshold.

33.02 ***Trip Generation Report:*** A trip generation report may be required by the Clerk in order to establish existing or proposed trip generation characteristics, for uses not included in Table 3 - Transportation Facilities Impact Fee per Variable Unit of the City of Concord's Impact Fee Ordinance, Chapter 29.2, Public Capital Facilities Impact Fees Ordinance.

33.03 ***Review Fees and Process:*** All traffic studies or trip generation reports shall be processed and reviewed pursuant to Section 32, Special Investigative Studies – Third Party Review, except that the traffic study may be performed by the City's Traffic Engineer, a NH Licensed Professional Engineer, and the cost estimate for his services shall be submitted to the Clerk by the City Engineer.

33.04 ***Future Streets*****:** Where the Master Plan, Official Map, or the adopted Capital Improvements Plan (CIP) indicates plans for realignment or widening a road that would require use of some of the land within the subdivision, the Board may require the applicant to dedicate such areas for widening or realignment of such roads.

33.05 ***Traffic Impacts:*** The intent of the study will be to address peak hour traffic and safety impacts on intersections, site driveways, and road way corridors applicable to the use and locations proposed and the impact of increased traffic in residential areas, as well as identifying mitigation measures to address any adverse impacts of a proposed subdivision on the City's transportation system and residential neighborhoods. The Board may require that alternative transportation modes such as pedestrian, bicycle, or transit be

addressed as part of a traffic study, may require a travel speed study, or may require the traffic study to address the impact of increased traffic on the quality of life in residential areas. The Board, after review and comment by the Clerk and the City Engineer, shall specify the extent of the required traffic improvements to mitigate the traffic, quality of life, and safety impacts of the increased traffic from the proposed subdivision.

33.06 ***Impact Fees***: The Board shall assign impact fee credits for required off-site improvements consistent with Article 29.2, Public Capital Facilities Impact Fees Ordinance, provided that the required improvement is in both the City's CIP and is located along a collector or arterial road so identified in the Master Plan. Credit shall not be given by the Board for site related access improvements against traffic impact fees, as set forth in Article 29.2, Public Capital Facilities Impact Fees Ordinance.

33.07 ***Project Scoping Session:*** Prior to the start of the traffic study or the submittal of a subdivision application, the applicant shall participate in a scoping session to identify the street and driveway intersections to be studied and the street corridors to be evaluated in the traffic study. The scoping session allows the opportunity for preliminary discussions related to trip generation, trip distribution, diversion and pass-by assumptions, and background growth rate assumptions. A project scoping meeting will be scheduled by the Clerk with the applicant's traffic engineer and the City's traffic engineer or traffic engineering consultant as applicable, each of whom shall be a NH Licensed Professional Engineer, as well as representatives from the City's Planning and Engineering Divisions. The scoping session shall discuss the following:

(1) The type and extent of the proposed subdivision;
(2) Proposed access and design elements;
(3) Area of influence, intersections, driveways, and street corridor segments to be evaluated;
(4) The location and time frame for automatic traffic recorder (ATR) counts;
(5) The location and timing of the manual turning movement counts, and the peak hour periods to be counted;
(6) Periods of analysis;
(7) Analysis scenarios;
(8) Trip generation and distribution;
(9) Trip capture and diversion assumptions;
(10) Trip distribution assumptions;
(11) Background growth rate assumptions;
(12) Other planned developments;

(13) Planned highway or other transportation improvements; and
(14) Review fees.

33.08 ***Elements of a Traffic Study***: The following items shall be considered the minimum information required to be provided to the Board to accurately assess the traffic, safety, and quality of life impacts on residential streets. Elements of the study may be modified by the Clerk as agreed to at the scoping session. The Planning Board may require additional information as deemed necessary to address the potential impacts of the subdivision on the roadway, network, pedestrian, bicycle, and transit system requirements and impacts of traffic on affected residential neighborhoods and streets:

(1) Location map showing the study area, subdivision, and the location of the ATR and manual turning movement counts;
(2) Subdivision plan with site access shown;
(3) Trip generation including average daily trips, AM peak hour trips where appropriate, PM peak hour trips, weekend peak hour trips where appropriate, and other peak periods which may be unique to the use or location;
(4) Capture or diverted link trip assumptions, if any;
(5) Trip distribution based on existing traffic flow patterns, marketing study, or other approved methodology;
(6) A field survey of existing conditions, including roadway width, lane widths, lane usage, traffic control, signing, sight distance, lighting, road conditions, and adjacent uses with driveway locations including those across the street from the proposed subdivision;
(7) Identification of planned or approved development in the vicinity of the proposed subdivision;
(8) Identification of planned roadway or other transportation improvements in the vicinity of the proposed subdivision;
(9) ATR counts on adjacent roadway network;
(10) Peak hour manual turning movement counts including AM peak hour where appropriate, PM peak hour, weekend peak hour trips where appropriate, and other peak periods which may be unique to the subdivision or location;
(11) Background growth information, including growth rates and assumptions used;
(12) Seasonal traffic count adjustment factors, including background counts and assumptions;
(13) Accident data for the study area locations over the latest three year period and an evaluation of the frequency and safety issues observed;

(14) Capacity analyses for each intersection for each scenario to be analyzed, including existing conditions, opening year without the subdivision, opening year with the subdivision, opening year plus ten (10) years without the subdivision, and opening year plus ten (10) years with the subdivision;

(15) Comparative analysis to determine impact of the proposed subdivision for the opening year and opening year plus ten (10) year scenarios;

(16) Queuing analysis, traffic signal warrant studies, gap analysis, left and right turn lane warrant studies, turn lane analysis, minimum site distance analysis, parking analysis, or any other analysis deemed applicable to the specific subdivision or location;

(17) Identification of increased daily travel volumes and percent on each roadway segment in the vicinity for each scenario being analyzed.

(18) A speed study, if applicable, to determine the 85th percentile travel speed;

(19) Identification of physical improvements or traffic control modifications necessary to provide acceptable operating conditions (level of service D or better) at the study locations;

(20) Identification of physical improvements or traffic control modifications necessary to improve or provide safe operating conditions at the study locations; and

(21) Identification of physical improvements or traffic control modifications necessary to improve traffic safety or address neighborhood traffic issues, especially measures to slow or eliminate cut through traffic in residential areas.

SECTION 34 CONDITIONAL USE PERMITS

34.01 ***General:*** All applications for CUPs that are required for, or in conjunction with, a subdivision application shall be reviewed and considered by the Planning Board, pursuant to the provisions of Article 28-9-4(b), Conditional Use Permits of the City of Concord Code of Ordinances.

34.02 ***Minimum Information:*** All applications for a CUP shall include an appropriate fee, application form, and narrative addressing the specific criteria set forth in the Zoning Ordinance for the CUP(s) requested and the general criteria for the issuance of s as set forth in Article 28-9-4(b), Conditional Use Permits of the City of Concord Code of Ordinances.

34.03 ***Concurrent with Subdivision***: Where subdivision approval by the Planning Board is required for the use for which a CUP is sought, the application and

review procedure for a CUP shall be made concurrent with the application for subdivision approval and in accordance with the procedures specified in the Subdivision Regulations, as applicable to the particular development.

34.04 ***Application Requirements:*** A complete application for a CUP shall contain the following:

(1) Minimum information, as set forth in Section 34.02, Minimum Information;
(2) Complete subdivision application;
(3) A statement and/or supporting documentation, in regard to compliance with each standard established in the Zoning Ordinance for each type of CUP requested; and
(4) Other information, plans ,or special studies that may be required by the Board.

34.05 ***Stipulations of Approval:*** In granting a CUP, the Planning Board may attach reasonable conditions to its approval including, but not limited to, the phasing of the subdivision where such conditions are determined by the Board to be necessary to further the objectives of the Zoning Ordinance, the Master Plan, or these regulations. Representations made at a public hearing or in material submitted to the Planning Board by an applicant in order to obtain a CUP shall be deemed to be conditions of the issuance of the permit.

34.06 ***Inspection of Improvements***: The Planning Division shall inspect subdivisions to determine conformity to approved CUP. No certificate of occupancy or use permit may be issued prior to a determination by the Clerk that the proposed use is consistent with the Board's approval.

34.07 ***Appeals to Superior Court:*** Any persons aggrieved by a decision of the Planning Board in regard to a CUP may appeal the Planning Board's decision to the Merrimack County Superior Court in the manner provided by RSA 677:15, Court Review. A Planning Board decision on the issuance of a CUP cannot be appealed to the Zoning Board of Adjustment in accordance with RSA 676:5, III, Appeals to the Board of Adjustment.

SECTION 35 ADMINISTRATION AND ENFORCEMENT

35.01 ***Amendments*****:** For the purpose of providing for the public health, safety, and general welfare, the Planning Board may from time to time amend, change, alter, add, or rescind the provisions imposed by these subdivision regulations.

Notification, public hearings, publication, and certification of all proposed amendments shall be accomplished by the Planning Board in accordance with applicable chapters of the NH Revised Statutes Annotated.

35.02 ***Conditions*****:** Regulations of the subdivision of land and the attachment of reasonable conditions to land subdivision is a valid exercise of the police powers delegated by the State to municipalities. The applicant has the duty to comply with the approved subdivision plan and any reasonable conditions set forth by the Planning Board for design, dedication, improvement, and restrictive use of the land, so as to conform to the physical and economical development of the City and to the safety and general welfare of the future lot owners in the subdivision and of the community at large.

35.03 ***Interpretation*****:** In their interpretation and application, the provisions of these regulations shall be held to be the minimum requirements for the promotion of the public health, safety, and general welfare.

35.04 ***Conflict with other Public Provisions*****:** These regulations are not intended to interfere with, abrogate, or annul any other ordinance, rule or regulation, statute, or other provision of law. Where any provision of these regulations imposes restrictions different from those imposed by any other provision of these regulations or any other ordinance, rule or regulation, or other provision of law, whichever provisions are more restrictive or impose higher standards shall control.

35.05 ***Conflict with Private Provisions*****:** These regulations are not intended to abrogate any easement, covenant, or any other private agreement or restriction provided that where the provisions of these regulations are more restrictive or impose higher standards or regulations than such easement, covenant, or other private agreement or restriction, the requirements of these regulations shall govern. Where the provision of the easement, covenant, or private agreement or restriction imposes duties and obligations more restrictive or higher standards than the requirements of these regulations or the determination of the Planning Board in approving a subdivision or in enforcing these regulations and such private provisions are not inconsistent with these regulations or determinations there under, then such private provisions shall be operative and supplemental to these regulations and determinations made there under.

35.06 ***Separability*****:** If any part or provision of these regulations or application thereof to any person or circumstances is adjudged invalid by any court of competent jurisdiction, such judgment shall be confined in its operation to the

part, provision, or application directly involved in all controversy in which such judgment shall have been rendered and shall not affect or impair the validity of the remainder of these regulations or the application thereof to other persons or circumstances. The Planning Board hereby declares that it would have enacted the remainder of these regulations even without any such part, provision, or application.

35.07 ***Saving Provision*****:** These regulations shall not be construed as abating any action now pending under, or by virtue of, prior existing subdivision regulations, or as discontinuing, abating, modifying, or altering any penalty accruing or about to accrue, or as affecting the liability of any person, firm, or corporation, or as waiving any right of the City under any section or provision existing at the time of adoption of these regulations, or as vacating or annulling any rights obtained by any person, firm, or corporation by lawful action of the City except as shall be expressly provided for in these regulations.

35.08 ***Waivers*****:** Where the Planning Board finds that extraordinary hardships or practical difficulties may result from strict compliance with these regulations and/or the purposes of these regulations may be served to a greater extent by an alternative proposal, it may approve waivers to these subdivision regulations so that substantial justice may be done and the public interest secured, provided that such waiver shall not have the effect of nullifying the intent and purpose of these regulations and further provided the Planning Board shall not approve waivers unless it shall make findings based upon the evidence presented to it in each specific case that:

(1) The granting of the waiver will not be detrimental to the public safety, health, or welfare or injurious to other property;

(2) The conditions upon which the request for a waiver is based are unique to the property for which the waiver is sought and are not applicable generally to other property;

(3) Because of the particular physical surroundings, shape, or topographical conditions of the specific property involved, a particular and unnecessary hardship to the owner would result, as distinguished from a mere inconvenience, if the strict letter of these regulations are carried out;

(4) Specific circumstances relative to the subdivision or conditions of the land in such subdivision indicate that the waiver will properly carry out, or not be contrary to, the spirit and intent of the regulations; and

(5) The waivers will not in any manner vary the provisions of the Zoning Ordinance, Master Plan, or Official Map.

35.09 ***Waiver Conditions***: In approving waivers, the Planning Board may require such conditions as will, in its judgment, secure substantially the objectives of the standards or requirements of these regulations. The basis of any waiver granted by the Planning Board shall be recorded in the minutes of the Board.

35.10 ***Waiver Petition*****:** A petition for any such waiver shall be submitted in writing by the applicant at the time when the plat is filed for the consideration of the Planning Board. The petition shall state fully the grounds for the application and all of the facts relied upon by the petitioner. A petition for a waiver shall be considered together with the application at the requisite public hearing pursuant to Section 35.15, Public Hearing.

35.11 ***Official Map*****:** The recordation of plats, which have been approved as provided herein, shall without further action modify the Official Map in accordance therewith.

35.12 ***Acceptance of Public Improvements*****:** No public improvements will be considered for acceptance by the City, until such time as all improvements have been carried out as shown on the final plat, in accord with the requirements of these regulations, and subject to any conditions established by the Planning Board at the time of final plat approval.

35.13 ***Fees*****:** The costs of processing and reviewing subdivision applications shall be borne entirely or in part by the applicant. The subdivision application fees adopted by the Planning Board are included in Appendix A. Fees.

35.14 ***Public Hearing*****:** All plats shall have a public hearing prior to consideration by the Planning Board for final subdivision approval or disapproval by the Planning Board. The process for a public hearing shall conform to the requirements of RSA 672, 673, 674, 675, and 676 as applicable and as may be amended and the following provisions:

(1) The applicant, all abutters, all holders of conservation, preservation or agricultural preservation restrictions, and every engineer, architect, land surveyor, landscape architect, or soil scientist whose seal appears

on the plans shall be notified of the hearing by certified mail, at not less than ten (10) days before the hearing date. The date of the hearing and the date the notices are mailed are not included in the ten (10) day notification period;

(2) The notice shall give a general description of the proposal which is subject to the application and shall identify the applicant and the location of the proposed subdivision. Said notice shall state time and place of the public hearing;

(3) Notices of the public hearing shall be posted in two (2) locations; and

(4) For the purposes of receiving testimony only and not for the purposes of notification, the term abutter shall include any person who is able to demonstrate that his land will be directly affected by the proposal under consideration.

***35.15 Planning Board Rules*:** The Planning Board's adopted rules shall govern the actions of the Board, the duties of the Clerk and the Acting Clerk of the Board, the procedures for testimony by the public and applicants at public hearings, and the conduct of public meetings.

***35.16 Action by the Planning Board*:**

(1) *Determination of Completeness*: The next available published application deadline date shall constitute the official submittal date of the plat from which the statutory period for determination of completeness shall be calculated, as set forth in NH RSA 676:4. Plats received prior to the deadline date shall be considered for completeness at the next scheduled regular meeting of the Planning Board after the deadline date. Continued Planning Board meetings and special meetings are not considered regular meetings of the Planning Board where an application can be determined complete. The Planning Board shall determine if a completed application has been submitted and shall set the application for hearing. A completed application shall contain all required information for each stage of the application process; shall be legible and properly prepared; shall accurately portray existing conditions; shall be accompanied by copies of special investigative studies; and shall contain sufficient information and detail for a full review and action by the Board.

(2) *Action on Completed Application*: Within sixty-five (65) days of the required public hearing being closed, the Board shall approve, approve with conditions, or disapprove the application, unless the time for action has been extended by consent of the applicant or by obtaining relief from the time restrictions set forth in RSA 676:4. If the Board fails to act within the required time frame, the applicant may seek relief afforded by NH RSA 676:4.

(3) *Approvals*: The Planning Board may approve a subdivision plat with or without conditions. All conditions shall be part of the record. Conditions which must be addressed prior to recording of the plat shall be completed to the satisfaction of the Clerk, prior to the plat being signed by the Chair and the Clerk of the Board and recorded in the Merrimack County Registry of Deeds.

(4) *Denials*: The Planning Board shall state the reasons for the denial, which shall be included as part of the record of the meeting of the Board at which the Board made the decision.

(5) *Filing with Registry of Deeds*: Once the Clerk determines that conditions of the subdivision approval which are required as a pre-condition of plat recordation are satisfactorily addressed, a properly executed mylar original shall be provided to the Planning Division for the signature of the Chair and the Clerk of the Board and recorded in the Merrimack County Registry of Deeds. The mylar shall comply with the regulations of the Merrimack County Registry of Deeds and, if rejected, the applicant shall be required to provide a new original for signatures.

***35.17 Compliance with Regulations*:** No street or utility construction shall be started until a plat prepared in accordance with the requirements of these regulations has been approved by the Board. No owner or agent of the owner of any parcel of land located in a proposed subdivision shall transfer or sell any parcel before the plat of such subdivision has been approved by the Planning Board in accordance with the provisions of these regulations and recorded and filed with the Merrimack County Registry of Deeds. Any lot to be transferred shall be specifically referenced on the approval stamp as approved by the Chair and the Clerk of the Planning Board. The subdivision of any lot or any parcel of land by the use of deeds, metes and bounds description, or other written description is expressly prohibited.

35.18 ***Appeals*****:** Any person aggrieved by an official action of the Board may appeal a decision of the Board to the Superior Court, as provided by NH RSA 677:15 within thirty (30) days of the vote of the Planning Board.

35.19 ***Minor and Major Amendments:*** The Clerk of the Board may approve minor amendments to a subdivision plat previously approved by the Planning Board, if the amendments are not substantive in nature, do not change the lot area or frontage of any parcel by more than two (2) percent, are fully in compliance with the standards contained in these regulations and the City of Concord Zoning Regulations, and are consistent with any condition imposed by the Board. The Clerk shall file a report with the Board of those minor amendments which he has approved at the next regular meeting of the Board following the approval of the minor amendments. Other changes to a plat prior to recording shall be considered by the Planning Board at the next regular meeting as a further consideration item with appropriate abutter notice. A major change to a previously approved plat shall require a new public hearing before the Board as required for a new application. Major changes include:

(1) The creation or elimination of a lot;
(2) Amending a lot area or frontage by more than two (2) percent;
(3) A modification to a previously approved CUP or a change requiring a new CUP;
(4) Any significant change to any proposed public or private improvement;
(5) A change which requires a waiver from these regulations;
(6) A request by the applicant to modify any condition of approval; and
(7) Any other substantive change which may, in the opinion of the Clerk, impact any abutter or the public interest.

35.20 ***Enforcement*****:** It shall be the duty of the Clerk of the Board to enforce these regulations and to bring any violations or lack of compliance herewith, to the attention of the City Solicitor and Code Administrator.

35.21 ***Violations and Penalties*****:** No building permit shall be issued for the construction of any building or structure located on a lot or plat subdivided or sold in violation of the provisions of these regulations.

(1) *Transfer of Property*: Any person, firm, or corporation who fails to comply with or violates any of these regulations shall be subject to a fine of $1,000.00 for each lot or parcel so transferred or sold, as provided in NH RSA 676:16.

(2) *Fines and Penalties*: Any person, firm, or corporation who violates any provision of these regulations shall be subject to a civil penalty not to exceed $275.00 per day or the maximum fee, as set forth in RSA 676:17 as it exists or may be amended. Each day that a violation continues shall be a separate offense.

(3) *Civil Enforcement*: Appropriate actions and proceedings may be taken by law or in equity to prevent any violation of these regulations, to prevent unlawful construction, to recover damages, to restrain, correct, or abate a violation, and to prevent illegal occupancy of a building structure or premises. These remedies shall be in addition to the penalties described above. In any civil action brought by the City, the City may recover its out-of-pocket expenses including, but not limited to, inspection fees, expert fees, and investigatory expenses as set forth in RSA 676:17.

***35.22 Exemption From Subsequent Amendments to the Subdivision Regulations and Zoning Ordinances*:** Subsequent to the filing of an endorsed plat with the Merrimack County Registry of Deeds, a plat shall be exempt from compliance with further amendments to these regulations and amendments to the Zoning Ordinance for a period of up to five (5) years after the date of recording pursuant to NH RSA 674:39, as long as active and substantial development as defined herein, has occurred within twenty four (24) months of the date of approval, the development of the subdivision remains in full compliance with public health regulations and ordinances, and the subdivision plat conformed to the Subdivision Regulations and Zoning Ordinance in effect at the time of approval and recording of the plat. If substantial completion of improvements shown on the plat has occurred in compliance with the approved plat, then the plat shall be deemed to be vested against any subsequent changes to these regulations and amendments to the Zoning Ordinance. Only those portions of the approved plat which are indicated in the Board's endorsement of the plat shall be deemed eligible for any exemption. No proposed subdivision or zoning amendment shall affect a plat under consideration by the Board which has been subject to notice by the Board pursuant to RSA 676:4, I(d) so long as said plat was subject to notice prior to the first legal notice of said change or amendment.

***35.23 Scattered or Premature Development*:** An application for approval of a subdivision may be deemed scattered or premature by the Board where either of the following conditions are found to exist:

(1) The proposed subdivision will occur in a location where municipal services or facilities are overburdened or will become overburdened by the placement of additional demand thereon; or

(2) The proposed subdivisions is located where adequate municipal services are not available and are not as yet included in municipal plans of the City.

Where the Board finds the proposed subdivision to be scattered or premature, the Board may require that the proposed subdivision be altered, reduced, phased, or deferred until the condition which causes it to be judged premature is corrected, removed, or otherwise no longer exists.

35.24 ***Permission to Visit and Inspect Property:*** In order for the City to properly review subdivision applications, the City's staff, Planning Board members, and designees of the Planning Board must have the ability to enter the property that is the subject of the application. Submittal to the Planning Division of an application for subdivision or any and all types of review either by the Planning Board or for administrative approval shall be deemed as granting of permission for the City's staff, Planning Board members, and/or their designees to enter onto the property for purposes of review.

Permission to visit the property extends from the date an application is submitted to the Planning Division until the application is formally denied or construction of an approved application is complete, and the final financial guarantee has been returned to the applicant.

Due to the number of projects under review, it is not possible to notify property owners in advance of the specific time of each intended visit. If the applicant wishes to place limitations upon access, then the limitations need to be requested in writing at the time the application is submitted. Any such request should include the reasons for the limitations, and the Board shall use its reasonable judgment in determining the extent to which the request is to be granted.

Glossary

Word Usage: For the purpose of this ordinance, certain terms and words shall have the meaning given here. Words used in the present tense include the future; the singular number includes the plural, and the plural includes the singular; the words "used" or "occupied" include the words "designed", "arranged", "intended" or "offered" to be used or occupied; the words "building", "structure", "lot", "land" or "premise" shall be construed as though followed by the words "or any portion thereof"; the word "may" is permissive; and the word "shall" is always mandatory and not merely directory.

Words and phrases not defined in this section but defined in other Codes and Ordinances of the City or by State statute will have meanings as defined by those codes and ordinances or statutes unless a contrary intention clearly appears.

Words not otherwise defined shall have their common meaning.

***Definitions*:** Certain terms or words shall be defined and interpreted as follows:

Abutter: Abutter means any person whose property adjoins or is directly across the street or stream from the land under consideration by the Planning Board or such person as defined by NH RSA 672:3 and NH 676:4. Abutters do not include property owners across a great pond as defined by the State of NH, the Merrimack River, Contoocook River, or Soucook River, or the interstate highway rights-of-way for I-93, I-89, and I-393.

Active and Substantial Development: For the purpose of vesting pursuant to NH RSA 674:39, active and substantial development does not include any surveying, planning, engineering, or architectural fees and services nor does it include land clearing, grading, or site preparation. Substantial development must include the construction of roads and/or common private drives to sub-base and the installation of at least fifty percent (50%) or more of the site utilities and drainage facilities for each phase of the development or as otherwise may be defined by the Planning Board at the time of subdivision approval. If active and substantial development has not occurred, no vesting

may occur pursuant to NH RSA 674:39 and subsequent phases of the subdivision are also no longer vested.

Applicant: The owner or designated agent of the owner of land proposed to be subdivided who seeks Planning Board approval as specified in these regulations.

As built Plan: A survey carried out during or immediately following a construction project to establish a record of the same, to facilitate the evaluation of completion of work, and to allow for release of a financial guarantee. The as built plans reflect all changes made to the subdivision construction plans during the construction process and show the exact dimensions, geometry, and location of all elements of the work completed. As built plans shall be provided in a format as may be established by the City Engineer from time to time. Also called as built drawings or as builts.

Block: A tract of land bounded by streets or by a combination of streets and public parks, cemeteries, railroad rights-of-way, shorelines of waterways, boundary lines of municipalities, or other topographic features.

Building: Any structure used or intended for supporting or sheltering any use of occupancy. The word "building" shall include the word "structure" unless the context unequivocally indicates otherwise. "Building" shall also mean any three-dimensional enclosure by any building materials of any space for use or occupancy, temporary or permanent, and shall include foundations in the ground and all parts of any kind of structure above ground, except fences and field or garden walls or embankment retaining walls. Any structure which is defined in Chapter 29, Building Code, of the Code of Ordinances, City of Concord.

Buildable Land Area:

(a) ***Non-residential Principal Uses***. Where the principal use of a lot is for non-residential purposes, buildable land area shall include all land area within the lot exclusive of the following:

(1) Land in the floodway within the Flood Hazard (FH) District;
(2) Wetlands;
(3) Surface waters;
(4) Bluffs and ravines;
(5) Land which is subject to easements, covenants, or other recorded legal instruments that prohibit development or

disallow the construction or placement of buildings or structures on said land; and

(6) Land within the natural vegetative buffer prescribed by the Shoreland Protection (SP) District.

(b) ***Residential Principal Uses.*** Where the principal use of a lot is for residential purposes, buildable land area shall include all land area within the lot exclusive of the following:

(1) Land in the floodway and the one hundred (100) year floodplain within the Flood Hazard (FH) District;
(2) Wetlands;
(3) Surface waters;
(4) Bluffs, ravines, and land having gradients greater than fifteen (15) percent;
(5) Land which is subject to easements, covenants, or other recorded legal instruments that prohibit development or disallow the construction or placement of buildings or structures on said land; and
(6) Land within the natural vegetative buffer prescribed by the Shoreland Protection (SP) District.

Capital Improvement Program (CIP): A ten (10) year financial plan prepared by the City Manager and submitted to the City Council for approval. The first year of the said period plan is included in the City budget for the current year and an additional year's planning is projected each year as provided in Title I, Chapter 2 of the Code of Ordinances. The final year of the ten-year plan contains projects which are proposed beyond the life of the plan.

Certified Wetland Scientist: A person qualified to identify and delineate jurisdictional wetlands that are certified under applicable laws of the State of NH.

Clerk: The City Planner is the Clerk of the Planning Board, and the Assistant City Planner is authorized to perform all duties of the City Planner and Clerk in his/her absence.

Cluster Development: A single family residential subdivision either on lots or part of a condominium, which is allowed pursuant to Article 28-4-7, Cluster Development, Zoning Ordinance, Code of Ordinances, Concord, NH.

Common Private Drive: A shared, privately owned means of access from a public street to lots or condominium units having the required frontage on a public street. Includes private streets and private driveways serving multiple non-residential uses.

Community Water System: A water system designed and constructed to serve a specific subdivision where water is supplied from a community well within the subdivision.

Community Sewer System: A centralized wastewater treatment facility designed to serve more than one residential dwelling or non-residential occupancy within the subdivision.

Complete Streets: Complete streets are designed to enable safe access for all users. Pedestrians, bicyclists, motorists, and transit riders of all ages and abilities should be able to safely move along and across a complete street.

Construction Plan: The maps or drawings accompanying a subdivision plat showing the specific location and design of improvements to be installed in the subdivision in accordance with the requirements of the Planning Board as a condition of the approval of the plat.

Date of Final Approval or Final Resolution: The date when the Planning Board either approves, approves with conditions, or disapproves a final plat.

Disturbed Area: All land areas proposed on- and off-site where the ground surface is to be or has been disturbed by grading, filling, or excavation to support development activity, including all areas where building, paving and other construction activity will occur or has occurred and areas where construction materials may be stored, as well as where construction activity may be or has been staged or supported.

Dwelling Units: Any room or suite of rooms forming a habitable unit for one family with its own cooking and food storage equipment, bathing and toilet facilities, and living, sleeping, and eating areas wholly within such room or suite of rooms, as defined in Article 28, Zoning Ordinance, Code of Ordinances, Concord, NH.

Driveway: A private way providing access for vehicles from a parking space, a garage, or other structure on a lot to a public or private street. The term includes the words drive, access way, private drive, common drive, or any combination of the above words.

Easement: Authorization by a property owner for the use by another and for a specified purpose of any designated part of his property.

Escrow: A deposit of cash with the municipality to insure the completion of a public or private improvement.

Financial Guarantee: An acceptable form of security consisting of a cash deposit, surety bond, letter of credit, or other form of guarantee as may be deemed acceptable to the City Solicitor. Financial guarantee includes the terms assurance, bond, performance guarantee, or surety.

Final Plat: The final detailed map or plan or record of a subdivision and any accompanying material as described in these regulations.

Flood Hazard: The area subject to a flood as defined in Chapter 28, Zoning Ordinance, of the Code of Ordinances of the City of Concord.

Frontage: A line dividing a lot from a street from which access is legally available and which is not a limited access highway. Lot frontage shall be a continuous line between side lot lines measured along the edge of the street right-of-way.

Grade: The slope of a road, street or other public way specified in percentage (%) terms.

Governmental Land Use: A use of land by a governmental agency, as defined in NH RSA 674:54.

Impervious Surface: Surfaces within a lot which do not absorb water, consisting of all buildings, structures, parking areas, driveways, roads, sidewalks, and any area paved with concrete, brick, asphalt, or other similar material, including gravel or stone dust parking lots or driveways.

Improvements:

(a) ***Capital Improvement:*** As defined in the Code of Ordinances, Title I, Chapter 2.13, Article 2 or any physical public betterment or improvement and any preliminary studies and surveys relative thereto; the acquisition of property of a permanent nature; or the purchase of equipment for any public betterment or improvement when first erected or acquired.

(b) ***Public Improvement:*** Any drainage ditch, roadway, park, sidewalk, multi-use or bicycle path, trail, tree, off-street parking lot, lot improvement, or other facility for which the City of Concord may ultimately assume the responsibility for maintenance and operation or for which the City's responsibility is already established.

(c) ***Common Private Improvement*:** Any common facility required to provide access, utility services, or other essential services or as required herein, within a condominium subdivision, cluster subdivision, a Planned Unit Development (PUD), or as shown in a CDP.

(d) ***Temporary Improvement:*** An improvement built and maintained by an applicant during construction of the subdivision and prior to release of a financial guarantee.

Individual Sewage Disposal System: A septic tank, seepage tile disposal system, or any other approved sewage treatment device approved by the NHDES.

Invasive Specie: Includes those plant species listed on the "New Hampshire Prohibited Plant Species" list promulgated by the NHDES.

Licensed Architect: An architect properly licensed by the State of NH.

Licensed Professional Engineer: An engineer properly licensed by the State of NH.

Licensed Landscape Architect: A landscape architect properly licensed by the State of NH.

Licensed Land Surveyor: A land surveyor properly licensed by the State of NH.

Limited Access Highway: A public right-of-way laid out or accepted by the City of Concord or by the State of NH within the corporate limits of the City, primarily used or intended to be used for passage or travel by motor vehicles and from which access can not legally be obtained to serve lots which are adjacent to said public right-of-way. Limited access highways are generally characterized by high volumes of traffic, no on-street parking, access only via interchanges, and two to six travel lanes which are often separated by a median.

Lot: The whole area of a single parcel of land with ascertainable boundaries in single or joint ownership, undivided by a street, established by deed(s) of record, or a segment of land ownership defined by lot boundary lines on a land subdivision plat duly approved and recorded pursuant to the City of Concord's Subdivision Regulations and the provisions of RSA 674:35 through 674:42, Regulation of Subdivision of Land.

Lot Area: The land wholly within a lot exclusive of land within a street and exclusive of land below the high waterline of any body of water contained therein.

Lot, Corner : A lot situated at the intersection of two streets.

Lot Line, Front. A line dividing a lot from a street from which access is legally available and which is not a limited access highway. Lot frontage shall be a continuous line between side lot lines measured along the edge of the street right-of-way.

Lot Line, Rear: Except for triangular lots, corner lots, and such other lots which have no rear lot lines, the lot line opposite the front lot line.

Lot Line, Side: Any lot line not a front or rear lot line.

Major Subdivision: All subdivisions not classified as minor subdivisions including, but not limited to, subdivisions of four (4) or more lots or any size subdivision requiring any new street or extension of the local governmental facilities or the creation of any public improvements.

Master Plan: The Master Plan of the City of Concord, prepared pursuant to RSA 674:2, Master Plan Purpose and Description and RSA 674:3, Master Plan Preparation and adopted by the Planning Board pursuant to RSA 674:4, Master Plan Adoption and Amendment, inclusive of all officially adopted supplements and amendments.

Minor Subdivision: Any subdivision containing three (3) or fewer lots fronting on an existing street not involving any new street or road, or the extension of municipal facilities, or the creation of any public improvements, and not adversely affecting the remainder of the parcel or adjoining property, and not in conflict with any provision or portion of the Master Plan, Official Map, Zoning Ordinance, health regulations or these regulations.

Municipal Government: For the purposes of these regulations, the City of Concord, NH.

Non-residential Subdivision: A subdivision whose intended use is other than residential, such as commercial or industrial. Such subdivision shall comply with the applicable provisions of these regulations.

Official Map: The map established by the City of Concord pursuant to NH RSA 674:9-11 and Title I, Chapter 14 of the Code of Ordinances showing the streets, highways, parks, and drainage systems and set-back lines thereto fore laid out, adopted, and established by law and any amendments or additions thereto adopted by the City of Concord or additions thereto resulting from the approval of subdivision plats by the Planning Board and the subsequent filing of such approved plats.

Open Space: An area of a lot unoccupied by buildings, structures, or impervious surfaces and intended for environmental, scenic, or recreational purposes.

Owner: Any person, group of persons, firm or firms, corporation or corporations, or any other legal entity having legal title to or sufficient proprietary interest in the land sought to be subdivided under these regulations.

Person: Any individual, firm, co-partnership, corporation, company, association, joint stock association or body politic, trustee, receiver, assignee, or other similar representative thereof.

Principal Use: The primary purpose for which a lot or structure is used.

Public Street: A street which has been or is to be accepted by the City of Concord for maintenance purposes and has been or is to be incorporated into the Official Map.

Private Street: A common private drive. See the definition under Street Classification for a common private drive.

Resubdivision: A change in a map of an approved or recorded subdivision plat, if such change affects any street layout on such map or area reserved thereon for public use, or any lot line, or if it affects any map or plan legally recorded prior to the adoption of any regulations controlling subdivisions.

Right-of-Way: A strip of land occupied or intended to be occupied by a street, crosswalk, railroad, road, electric transmission line, oil or gas pipeline, water main, sanitary or storm sewer main, shade trees, or for another special use. The usage of the term "right-of-way" for subdivision purposes shall mean that every right-of-way hereafter established and shown on a final plat is to be separate and distinct from the lots or parcels adjoining such right-of-way and not included within the dimensions or areas of such lots or parcels. Rights-of-way intended for streets, crosswalks, water mains, sanitary sewers, storm drains, shade trees, or any other use involving maintenance by a public agency shall be dedicated to public use for that specific purpose.

Right-of-Way Width: The distance between property lines located on both sides of a right-of-way, as measured at right angles to the center line of the right-of-way.

Sale or Lease: Any immediate or future transfer of ownership, or any possessory interest in land, including contract of sale, lease, devise, in testate succession, condominium conveyance, or transfer, or an interest in a subdivision or part thereof, whether by metes and bounds, deed, contract, plat, map, lease, devise, in testate succession, or other written instrument.

Site-related improvements: All off-site and on-site improvements or land dedications which the City may legally request an applicant to construct or dedicate to the City as a condition of the issuance of a land use permit or approval, including without limitation:

(a) New access roads leading to the new development;
(b) Driveways and roads within the new development;
(c) Acceleration and deceleration lanes, right and left turn lanes, intersection improvements and other improvements to city roads, leading to the roads and driveways referred to in (a) and (b), that are necessitated by the new development;
(d) Traffic control measures for the roads and driveways referred to in (a) and (b);
(e) Sidewalks, curbing, drainage improvements, walls and fences, landscaping buffers, and berms on-site or within the new development's frontage, and existing public or private streets; and
(f) All other facilities that are necessitated by the new development to the maximum extent that applicable law allows the cost or construction of such facilities to be imposed on or assessed against the applicant.

Site Stabilization Guarantee: A financial guarantee collected to insure that once a site is disturbed by construction, the ground surface can be revegetated to prevent erosion by wind or water. A site restoration security is to insure that where construction on a site has been terminated or abandoned and the developer cannot or will not restore the site, the City can act to control erosion, prevent surface water pollution, or address nuisance impacts on nearby properties.

Stabilized: A state in which the soils on the site will not erode under the conditions of a 10-year storm.

Street Tree: A tree in a public place, street, special easement, or right-of-way adjoining a street as provided in these regulations.

Structure: A combination of material assembled at a fixed location to give support or shelter such as a building, tower, framework, platform, bin, or the like.

Street, Classification: For the purpose of providing for the development of the streets, highways, roads, and rights-of-way in the City, and for their future improvement, reconstruction, realignment, and necessary widening, including provision for curbs and sidewalks, each existing street, highway, road and right-of-way and those located on approved and filed plats, have been designated on the Official Map of the City of Concord and classification of each street, highway, road and right-of-way is based upon its location in the respective zoning districts of the City and its present and estimated future traffic volume and its relative importance and function as specified in the Master Plan. The required improvements shall be as set forth for each street classification on the Official Map. The following classifications are:

(a) *Interstate Highways:* These are controlled access, divided highways with at least four (4) travel lanes, and all intersections are grade-separated interchanges with on and off ramps. Average daily traffic volumes (ADT) may exceed 70,000 trips per day. Posted speed limits are generally between 55 and 65 miles per hour (mph). No access is allowed from abutting property, and existing and proposed lots cannot use these highways as their required frontage. In Concord, I-93, I-89, and I-393 are interstate highways;

(b) *Major Arterials:* A major arterial generally will have a minimum of four (4) travel lanes with traffic volumes ranging from 16,000

to 30,000 ADT. Posted speed limits should range between 35 and 50 mph. The principal function of a major arterial is to carry cross town and regional traffic. Access to abutting properties should be strictly controlled and on-street parking should be prohibited;

(c) *Minor Arterials:* Minor arterial generally carry traffic volumes between 8,000 and 16,000 ADT at operating speeds of 30 to 50 mph. They will usually consist of two (2) travel lanes that may be increased to three (3) or four (4) lanes to handle locally heavy traffic. Their principal purpose is to provide intra-city connections between neighborhoods and commercial areas and to provide access to the regional traffic network. Access to these streets is controlled to maintain adequate levels of service and safe operating conditions. On-street parking should be allowed only in limited circumstances in older urban areas without adequate off-street parking;

(d) *Major Collectors:* Major collectors typically carry between 2,500 to 12,000 ADT on two (2) lanes of travel way. The purpose of the major collectors is to provide access from significant areas of residential, commercial, and industrial activity to the arterial network. Access to these streets should be controlled to maintain adequate levels of service and safe operating conditions. On-street parking should be discouraged;

(e) *Minor Collectors*: These are two (2) lane roads similar in nature to urban and rural collectors. However, these roads generally carry more traffic than would be expected for rural collectors, but trip lengths are generally longer than found on the typical urban collector. These roads generally carry a higher percentage of inter-city and cross town trips than would normally be expected on a roadway of this type and volume. On-street parking should be discouraged;

(f) *Urban Collectors*: These are two (2) lane roads designed to move traffic through and out of dense residential, commercial, or industrial areas. ADT volumes should not exceed 2,500 vehicles in residential areas and 10,000 vehicles in commercial or industrial areas. The design and location of driveways should be regulated in order to ensure safe operating conditions. Posted speed limits on these streets range from twenty-five (25)

and thirty-five (35) mph. On-street parking is commonly found on these streets;

(g) *Rural Collectors*: These streets are designed to serve as feeder roads to large areas of existing and proposed low density agricultural and residential development. ADT volumes should range between 1500 to 2500 vehicles on two (2) travel lanes. The design and the location of driveways should be regulated in order to ensure safe operating conditions. Posted speed limits will usually range between forty-five (45) and fifty (50) mph;

(h) *Local Streets:* These streets should carry fewer than 1,500 vehicles per day. The purpose of these streets is to provide access to abutting land uses at operating speeds of thirty (30) mph or less in urban areas and forty-five (45) mph or less in rural areas;

(i) *Cul-de-Sac:* A local or minor street intended as a permanent dead end with only one outlet and having an appropriate terminus for the safe and convenient reversal of traffic movements; and

(j) *Common Private Drive:* A private way serving the purpose of providing vehicle and pedestrian access to multiple lots or condominium land units and serving a comparable function to a local or cul-de-sac street.

Subdivision: Subdivision is defined in NH RSA 672:14 and as follows:

(a) "*Subdivision*" means the division of the lot, tract, or parcel of land into two (2) or more lots, plats, sites, or other divisions of land for the purpose, whether immediate or future, of sale, rent, lease, condominium conveyance, or building development. It includes resubdivision and, when appropriate to the context, relates to the process of subdividing or to the land or territory subdivided;

(b) The division of a parcel of land held in common and subsequently divided into parts among the several owners shall be deemed a subdivision;

(c) The grant of an easement in gross to a public utility for the purpose of placing and maintaining overhead and underground facilities necessary for its transmission or distribution network

such as poles, wires, cable, conduit, manholes, repeaters, and supporting apparatus, including any unstaffed structure which is less than 500 square feet, shall not be construed as a subdivision and shall not be deemed to create any new division of land for any other purpose; and

(d) The rent, lease, development, or grant of an easement to a utility for the purpose of placing and maintaining a wireless communication facility such as towers, poles, antennas, wires, cable, conduit, manholes, repeaters, and supporting apparatus or other unstaffed structure which is less than 500 square feet shall not be construed as a subdivision and shall not be deemed to create any new division of land for any other purpose.

Subdivision Agent: Any person who represents or acts for or on behalf of a applicant in selling, leasing, or developing or offering to sell, lease, or develop any interest, lot, parcel, unit, site, or plat in a subdivision, except an attorney-at-law whose representation of another person consists solely of rendering legal services.

Useable Land: That portion of the buildable land area, as defined in the Zoning Ordinance of the City of Concord, exclusive of any yard, building, wetland buffer, buffers to bluffs, or Shoreland Protection (SP) District setback. A building could be built within the Useable Land Area.

Wetland: An area that is inundated or saturated by surface water or groundwater at a frequency and duration sufficient to support, and that under normal conditions does support, a prevalence of vegetation typically adapted for life in saturated soil conditions. Methods for identifying and mapping wetlands shall utilize the procedures outlined in the Army Corp of Engineers Wetlands Delineations Manual 1987 and the Regional Field Indicators for Identifying Hydric Soils in New England 1995. A certified wetland scientist shall perform the wetland delineation. Wetlands generally include, but are not limited to, lakes, rivers, streams, ponds, swamps, marshes, bogs, vernal pools, and similar areas.

Yard: An open space on the same lot with a main building unoccupied and unobstructed by any structure or portion of a structure provided that fences, walls, poles, posts, and other customary yard accessories, ornaments, and furniture may be permitted in any yard subject to height limitations and requirements limiting obstruction of visibility.

Yard, Front: A space between a street line and a line parallel thereto extending between side lot lines drawn through the nearest point of a structure.

Yard, Side: A yard extending from the front yard or front lot line where there is no front yard to the rear yard.

Yard, Rear: A yard extending between side lot lines across the rear of the lot.

Zoning: Refers to the Zoning Ordinance of the City of Concord, NH, as provided in the Municipal Code of Ordinances, Article 28.

Appendices

Appendix A: Fees – effective April 18, 2013.

Please note that more than one fee may apply to each Planning Board application

Type of Application	Fee
Subdivisions	
Lot Line Adjustment (Subdivision with no new lots created)	• $300.00 Application fee • Abutter notification fee • Recording fee and other fees and surcharges as charged by the Merrimack County Registry of Deeds (check made payable to the MCRD and due at the time of recording)
Minor Subdivision (three lots or fewer with no new road)	• $300.00 Application fee • $100.00 for each new lot • Abutter notification fee • Recording fee and other fees and surcharges as charged by the Merrimack County Registry of Deeds (check made payable to the MCRD and due at the time of recording)
Major Subdivision – Design Review Phase	• $300.00 Application fee • Abutter notification fee
Major Subdivision	• $300.00 Application fee OR $1000 if no Design Review Phase review and approval • $150.00 for each new lot • Abutter notification fee • Recording fee and other fees and surcharges as charged by the Merrimack County Registry of Deeds (check made payable to the

	MCRD and due at the time of recording)
Site Plans	
Minor Site Plan Review	• $300.00 Application fee • $100.00 for each new or redeveloped dwelling unit • $100.00 for each new or redeveloped 1,000 sq ft of non-residential gross floor area or part thereof • Abutter notification fee
Major Site Plan – Design Review Phase	• $300 Application fee • Abutter notification fee
Major Site Plan	• No Application fee OR $300 if no Design Review Phase review and approval • $150.00 for each new or redeveloped dwelling unit • $150.00 for each new or redeveloped 1,000 sq ft of non-residential gross floor area or part thereof • Abutter notification fee
Condominium Declarations	
Condominium Declaration, Condominium Conversion of an Existing Development	• $300.00 Application fee • $100.00 for each new dwelling unit • $300 for each new land unit • $100.00 for each 1,000 square feet of gross non-residential floor area or part thereof • Abutter notification fee • Recording fee and other fees and surcharges as charged by the Merrimack County Registry of Deeds (check made payable to the MCRD and due at the time of recording)

Architectural Design Review	
Where Site Plan Review is not otherwise required	• $25.00 Application Fee for Each Sign • $150.00 Application Fee for Façade Changes to structures less than 5,000 sq ft • $300.00 Application Fee for Façade Changes to structures 5,000 sq ft or more
Conditional Use Permits	
Wireless telecommunication equipment	• $750.00 Application fee • Abutter notification fee (including regional notification pursuant to RSA 12-K:7)
Disturbance to buffers to wetlands, bluffs, Shoreland Protection District and encroachments in the Floodway and F2 District	• $250.00 Application fee • Abutter notification fee, if no concurrent Site Plan Review • $50.00 up to 100 sq. ft. of disturbance • $150.00 101 to 1,000 sq. ft. of disturbance • $300.00 greater than 1,000 sq. ft. of disturbance
All other CUPs	• $250.00 Application fee per Conditional Use Permit application • Abutter notification fee, if no concurrent Site Plan Review
Miscellaneous Fees	
Abutter Notification Fee	• $5.00 per public hearing notice, for each abutter, owner, agent and all professionals involved in the preparation of the plan This fee is charged for each separate date of a determination of completeness and/or public hearing for an application. If an application is is postponed at the request of the applicant after abutter notifications have been sent, an additional Abutter Notification Fee shall be required.
Request to re-schedule a public hearing on an application already set for public hearing	• $300.00 • Abutter notification fee

Request for an Amendment to an Approved Subdivision or Site Plan	• $300.00 Major Site Plan OR $200.00 Minor Site Plan • Abutter notification fee
Request for an Extension to an Approved Subdivision or Site Plan	• $300.00 • Abutter notification fee
Inspection Fee for Temporary Certificate of Occupancy	• $300.00
Recording of corrected or additional plats or documents subsequent to an initial recording	• $50.00 per document • $50.00 per plan sheet • Recording fee and other fees and surcharges as charged by the Merrimack County Registry of Deeds (check made payable to the MCRD and due at the time of recording)
Request for a Determination of Completeness by the Board where an application has been previously determined incomplete	• $250.00 for each discrete consideration of the application by the Board • Abutter notification fee
Voluntary Merger	• $75.00 • Recording fee and other fees and surcharges as charged by the Merrimack County Registry of Deeds (check made payable to the MCRD), except for the notice of lot consolidation.
Traffic Impact Review Fee	• A Traffic Impact Review Fee is required for projects which are expected to generate at least 200 vehicle trips per day or 20 vehicle trip ends per hour. • The traffic impact review fee shall be as specified by the City Engineer based on an estimate of the time for the City's Traffic Engineer to conduct a review. • This fee shall be separate and distinct from any additional fee for a third party review or special investigative study which the Planning Board may require.

Special Investigations: The Planning Board, at its discretion, may either request an applicant to prepare special studies of public facilities and utilities, natural resources, environmental quality issues, or fiscal and economic impacts at the applicant's expense or contract with a consultant to perform these studies at the applicant's expense.

Review of Applications: In the review of applications, the Planning Board may contract with consultants to review all or portions of any application, an environmental impact statement, or any special study requested by the Planning Board. This review shall be at the applicant's expense.

Appendices

Appendix B: Standard Notes

The following notes are listed as a guideline for applicants in preparing a recordable subdivision plat. The following notes should be provided where applicable to the subdivision plat. The particular circumstances of a plat may require additional notes in order to properly address the terms and conditions of the property or proposed parcels. The use of tables is recommended for zoning information and tabulations, especially for major subdivisions involving three or more lots.

Recordable Plat

- Purpose of the plan;
- Certificate of ownership;
- Tax map, block, and lot numbers of the existing parcels;
- Existing and proposed street addresses of the parcels;
- Area of subject parcel(s);
- Zoning designation of subject parcel(s) including all overlay zones;
- Minimum lot area, frontage, and setback dimensions required for the zoning district(s) and for wetland buffers, bluff setbacks, and the Shoreland Protection Overlay District;
- Required tabulations of use, area, lot coverage, parking existing and proposed, useable and buildable land area, etc., as applicable;
- Notes in regard to existing and proposed easements;
- Source of sanitary sewer and potable water supply;
- Zoning variances and/or special exceptions granted;
- Flood Insurance Rate Map sheets used to identify 100-year flood elevation and zone designation. If required, minimum finished floor elevation;
- If applicable, flood hazard designation along Merrimack River (F1) or (F2) and minimum finished floor elevation;
- List of required local, State, and Federal permits;
- List of any Planning Board waivers and CUPs;
- List of those conditions of Planning Board approval which remain to be fulfilled after the recording of the plat;
- Phasing notes; and
- Note regarding which plans are recorded and which plans are available at the City of Concord Planning Division.

Appendices

Appendix C: Easements & Legal Documents

The following easement documents and agreements are provided for applicant use on the City of Concord Planning Division website. Any applicant proposing a subdivision shall use all or a portion of these sample easements as necessary to prepare the necessary conveyances, agreement, or financial guarantee.

Standard Street Public Right-of-Way Easement
Standard Public Drainage (Storm Water) Easement
Standard Utility Easement
Standard Sanitary Sewer Easement
Standard Slope Easement
Agreement to Convey an Easement
Sample Letter of Credit

Sample Conservation Easements are provided for applicant use on the City of Concord Planning Division website. Any applicant proposing a cluster subdivision shall use all or a portion of these sample easements as guidelines for preparing open space easements, conservation easements, or conservation deeds. All conservation easements are subject to review and approval by the Planning Board, after consultation with the Conservation Commission, and shall be accepted by the City Council.

Appendices

Appendix D: Certification

The Planning Board's certificates of adoption are incorporated herein as Appendix D.

City of Concord, NH

CERTIFICATION

This version of the Subdivision Regulations was adopted on December 15, 2010 at a meeting of the City Planning Board, after a duly notified Public Hearing and consideration of testimony received, 8 members of the Board were present and voted 8-0 in favor of adopting these regulations which shall take effect on January 1, 2011 and after the filing of a copy of this Certificate with City Clerk.

Attest: City Planning Board
City of Concord
New Hampshire

Gerald L. Drypolcher, Chair

Susanne Smith Meyer, Member

John B. Swope, Vice-Chair

Martin Cross
Ex Officio Member

Matthew Hicks, Member

Carol R. Foss, Member

Chiara Dolcino, Member

Councilor Stephen Shurtleff
City Council Member

Vacant

Councilor Jan McIure
Alternate City Council Member

Vacant
Alternate Member

Frank E. Kenison, Esq.
Alternate Member

City of Concord, NH

CERTIFICATION

The attached amendments to the City of Concord Subdivision Regulations were adopted on ~~September 21, 2011~~ OCTOBER 5, 2011 at a meeting of the City Planning Board, after a duly notified Public Hearing and consideration of testimony received. 8 members of the Board were present and voted 8-0 in favor of adopting these regulations which shall take effect on ~~September 26~~, 2011 and upon the filling with the City Clerk.

OCTOBER 5, 2011

Attest:

City Planning Board
City of Concord
New Hampshire

Gerald L. Drypolcher, Chair

Susanne Smith Meyer, Member

John F. Swope, Vice-Chair

Matthew Hicks, Member

Richard Lavoie, Member

John Regan, Member

Martin Gross, Ex-Officio Member

Carol R. Foss, Member

Chiara Dolcino, Alternate Member

Frank E. Kenison, Esq.
Alternate Member

Councilor Stephen Shurtleff
City Council Member

Councilor Jan Mclure
Alternate City Council Member